SmarterGlass

state-of-the-art display solutions

www.smarterglass.com
978 997 4104
sales@smarterglass.com

Promate Electronic Co., Ltd
4F, 32, Sec. 1, Huan Shan RD., Nei Hu, 104, Taipei, R.O.C.
Tel: 886-2-2659-0303 FAX: 886-2-2658-0954

Product Specification

Model No.: 97G150X3N0F-6

Description: 15" TFT-LCD Module with 5-Wire Resistive Touch Panel

Document No.: DOC-50-080132

Version: 1.1

Total Pages: 27

Date: 14th November 2008

Approved By			Checked By	Prepared By
Department		Date		
R&D	*Davis Weng*		Eva Yang	Melody Chang
Marketing	*Amy Chen*			
Sales	*Jim Chen*		☐PM ☐R&D	☐PM ☐R&D
Production	*Roc Cheng*		☐Production	☐Production

ALL RIGHTS STRICTLY RESERVED. ANY PORTION OF THIS PAPER SHALL NOT BE REPRODUCED, COPIED, OR TRANSFORMED TO ANY OTHER FORMS WITHOUT PREMISSION FROM PROMATE ELECTRONIC CO., LTD.

Promate Electronic Co., Ltd.
4F, 32, Sec. 1, Huan Shan RD., Nei Hu, 114, Taipei, R.O.C.
Tel: 886-2-2659-0303 FAX: 886-2-2658-0954

Record of Revision

Version	Revise Date	Page Affected	Content
Preliminary	2/ 10/ 2008	-	First Draft
1.1	14/ 11/ 2008		Adding table of content, packing, and correct the cover page

ALL RIGHTS STRICTLY RESERVED. ANY PORTION OF THIS PAPER SHALL NOT BE REPRODUCED, COPIED, OR TRANSFORMED TO ANY OTHER FORMS WITHOUT PREMISSION FROM PROMATE ELECTRONIC CO., LTD

Promate Electronic Co., Ltd.
4F, 32, Sec. 1, Huan Shan RD., Nei Hu, 114, Taipei, R.O.C.
Tel: 886-2-2659-0303 FAX: 886-2-2658-0954

Table of Contents

1. HANDLING PRECAUTIONS……5

2. GENERAL DESCRIPTION……6

2.1 DISPLAY CHARACTERISTICS……6
2.2 FUNCTIONAL BLOCK DIAGRAM……7

3. ABSOLUTE MAXIMUM RATINGS…… 8

4. OPTICAL CHARACTERISTICS……9

5. SIGNAL CHARACTERISTIC……13

5.1 MODULE INTERFACE CONNECTOR……13
5.2 MODULE CONNECTOR PIN CONFIGURATION……13
5.3 BACKLIGHT CONNECTORS……13
5.4 BACKLIGHT CONNECTOR PIN CONFIGURATION……14
5.5 SIGNAL ELECTRICAL CHARACTERISTICS……14
5.6 INTERFACE TIMING CHARACTERISTICS……15
5.7 INTERFACE TIMING DEFINITION……16

6. PIXEL FORMAT IMAGE……17

7. POWER CONSUMPTION……18

8. POWER ON/OFF SEQUENCE……18

9. BACKLIGHT CHARACTERISTICS……19

9.1 SIGNAL FOR LAMP CONNECTOR……19
9.2 PARAMETER GUIDELINE FOR CCFL INVERTER……19

10. VIBRATION, SHOCK AND DROP……20

10.1 VIBRATION AND SHOCK……20
10.1.1 Vibration Test Spec……20
10.1.2 Shock Test Spec……20
10.2 DROP……20

11.0 ENVIRONMENT

11.1 TEMPERATURE AND HUMIDITY……21
11.1.1 Operating Conditions…… 21
11.1.2 Shippingconditions……21
11.2 ATMOSPHERIC PRESSURE……21
11.3 THERMAL SHOCK……21

12.0 RELIABILITY……22

12.1 FAILURE CRITERIA……22
12.2 FAILURE RATE……22
12.2.1 usage……22
12.2.2 Component De-rating……22
12.2.3 ccfl life……22
12.2.4 on/off cycle……22

13.0 SAFETY……23

13.1 SHARP EDGE REQUIREMENTS……23
13.2 MATERIALS……23
13.2.1 Toxicity……23
13.2.2 Flammability……23

14.0 OTHER REQUIREMENTS……23

ALL RIGHTS STRICTLY RESERVED. ANY PORTION OF THIS PAPER SHALL NOT BE REPRODUCED, COPIED, OR TRANSFORMED TO ANY OTHER FORMS WITHOUT PREMISSION FROM PROMATE ELECTRONIC CO., LTD

14.1 SMOKE FREE DESIGN 23
14.2 NATIONAL TEST LAB REQUIREMENT..... 23

15.0 PACKAGING……..24

16.0 MECHANICAL CHARACTERISTICS…….. ……..……..……25

16.1 ASSEMBLY DIMENSION……..25
16.2 LCM FRONT VIEW .....……26
16.3 HIGGSTEC 5-WIRE TOUCH SENSOR……..27

ALL RIGHTS STRICTLY RESERVED. ANY PORTION OF THIS PAPER SHALL NOT BE REPRODUCED, COPIED, OR TRANSFORMED TO ANY OTHER FORMS WITHOUT PREMISSION FROM PROMATE ELECTRONIC CO., LTD

1. Handling Precautions

1) Since front polarizer is easily damaged, be careful not to scratch it.
2) Be sure to turn off power supply when inserting or disconnecting from input connector.
3) Wipe off water drop immediately. Long contact with water may cause discoloration or spots.
4) When the panel surface is soiled, wipe it with absorbent cotton or other soft cloth.
5) Since the panel is made of glass, it may break or crack if dropped or bumped on hard surface.
6) Since CMOS LSI is used in this module, take care of static electricity and insure human earth when handling.
7) Do not open nor modify the Module Assembly.
8) Do not press the reflector sheet at the back of the module to any directions.
9) In case if a Module has to be put back into the packing container slot after once it was taken out from the container, do not press the center of the CCFL Reflector edge. Instead, press at the far ends of the CCFL Reflector edge softly. Otherwise the TFT Module may be damaged.
10) At the insertion or removal of the Signal Interface Connector, be sure not to rotate nor tilt the Interface Connector of the TFT Module.
11) After installation of the TFT Module into an enclosure (LCD monitor housing, for example), do not twist nor bend the TFT Module even momentary. At designing the enclosure, it should be taken into consideration that no bending/twisting forces are applied to the TFT Module from outside. Otherwise the TFT Module may be damaged.
12) Cold cathode fluorescent lamp in LCD contains a small amount of mercury. Please follow local ordinances or regulations for disposal.
13) Small amount of materials having no flammability grade is used in the LCD module. The LCD module should be supplied by power complied with requirements of Limited Power Source, or be applied for exemption.
14) The LCD module is designed so that Limited Current Circuit supplies the CCFL in it. Do not connect the CCFL in Hazardous Voltage Circuit.

ALL RIGHTS STRICTLY RESERVED. ANY PORTION OF THIS PAPER SHALL NOT BE REPRODUCED, COPIED, OR TRANSFORMED TO ANY OTHER FORMS WITHOUT PREMISSION FROM PROMATE ELECTRONIC CO., LTD

2. General Description

This specification applies to the 15.0 inch Color TFT-LCD Module.
The display supports the XGA (1024(H) x 768(V)) screen format and 16.2M colors (RGB 6-bits + FRC data)/262K (RGB 6-bit) selectable.
All input signals are 1 Channel LVDS interface compatible.
This module does not contain an inverter card for backlight.
All the design rules of this module can correspond to PSWG standard.

Features

- XGA 1024(H) x 768(V) resolution
- 50000 hours lamp life
- 2 CCFLs (Cold cathode Fluorescent Lamp)
- High contrast ratio, high aperture ratio
- Wide viewing angle
- High speed response
- Low power consumption
- Wide temp support
- Replaceable lamp

2.1 Display Characteristics

The following items are characteristics summary on the table under 25ºC condition:

ITEMS	Unit	SPECIFICATIONS
Screen diagonal	[mm]	381 (15”)
Outline dimension	[mm]	326.5 (Typ) x 253.5 (Typ) x 14.5 (Max)
Display Area	[mm]	304.128 (H) x 228.096
Resolution		1024(R,G,B x 3) x 768
Pixel Pitch	[mm]	0.297 x 0.297
Pixel Arrangement		R.G.B. Vertical Stripe
Display Mode		TN mode, Normally White
Typical white Luminance.	[cd/m^2]	200nit (Typ) @5.5mA
Contrast Ratio		700: 1 (Typ)
Support Colors		16.2M colors (RGB 6-bit + FRC data)/262k(RGB 6-bit) selectable
Response Time	[msec]	8ms
Nominal Input Voltage VDD	[Volt]	+3.3 V (Typ)
Typical Power Consumption	[Watt]	8.6 W (Typ.) @6.0mA (Gray Bar Pattern)
Electrical Interface		1 Channel LVDS
Weight	[Grams]	TBD
Surface treatment		Anti-glare, hard coating (3H)
Temperature Range Operating Storage (Shipping)	 [^{o}C] [^{o}C]	 0 to +65 -20 to +65

ALL RIGHTS STRICTLY RESERVED. ANY PORTION OF THIS PAPER SHALL NOT BE REPRODUCED, COPIED, OR TRANSFORMED TO ANY OTHER FORMS WITHOUT PREMISSION FROM PROMATE ELECTRONIC CO., LTD

2.2 Functional Block Diagram

The following diagram shows the functional block of 15.0 inches Color TFT-LCD Module:

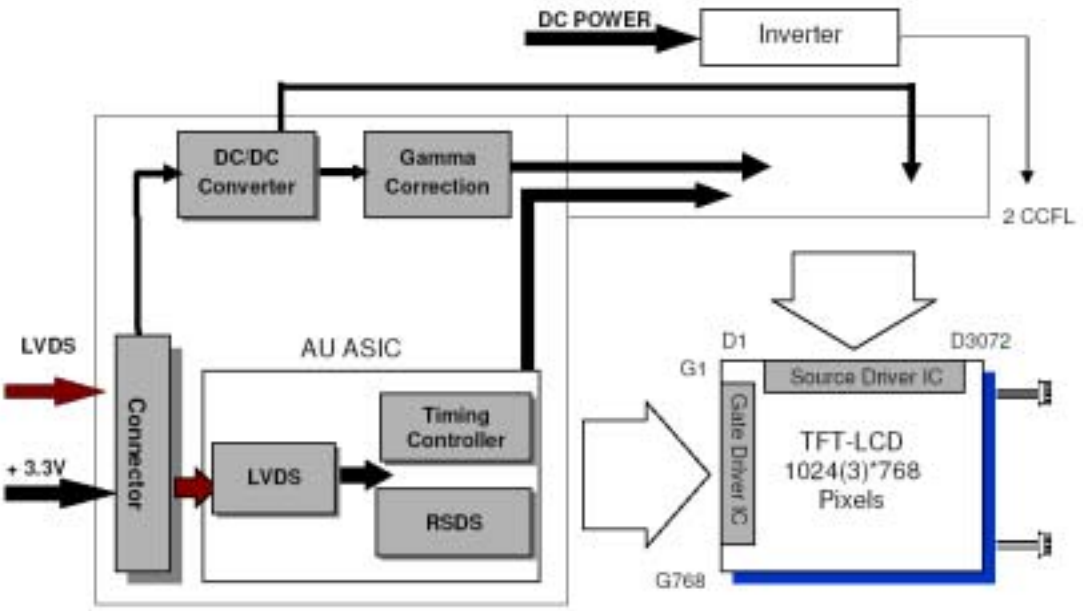

3804-F20N-06R / MSB240420E JST-BHR-03VS-1

Mating Type: HRS DF14-20S-1.25C SM02(8.0)B-BHS-1-TB

ALL RIGHTS STRICTLY RESERVED. ANY PORTION OF THIS PAPER SHALL NOT BE REPRODUCED, COPIED, OR TRANSFORMED TO ANY OTHER FORMS WITHOUT PREMISSION FROM PROMATE ELECTRONIC CO., LTD

Promate Electronic Co., Ltd.
4F, 32, Sec. 1, Huan Shan RD., Nei Hu, 114, Taipei, R.O.C.
Tel: 886-2-2659-0303 FAX: 886-2-2658-0954

3. Absolute Maximum Ratings

Absolute maximum ratings of the module is as following:

Item	Symbol	Min	Max	Unit	Conditions
Logic/LCD Drive Voltage	VDD	-0.3	+3.6	[Volt]	
Input Voltage of Signal	Vin	-0.3	+3.6	[Volt]	
CCFL Current	ICFL	2.5	8.5	[mA] rms	Note 1
Operating Temperature	TOP	0	+60	[°C]	Note 2
Operating Humidity	HOP	8	90	[%RH]	Note 2
Storage Temperature	TST	-20	+65	[°C]	Note 2
Storage Humidity	HST	8	90	[%RH]	Note 2
Vibration			1.5 / 10-200	[G / Hz]	
Shock			50/20	[G / ms]	Half sine wave

Note 1: CCFL life time will drop dramatically if exceeding 6.5mA; It will have safety concern if exceeding 8.5mA.

Note 2: Maximum Wet-Bulb should be 39℃and no condensation.

Note 3: For quality performance, please refer to Promate IIS (Incoming Inspection Standard).
Please refer to the graph below for corresponding of temperature and humidity.

Wet Bulb Temperature Chart

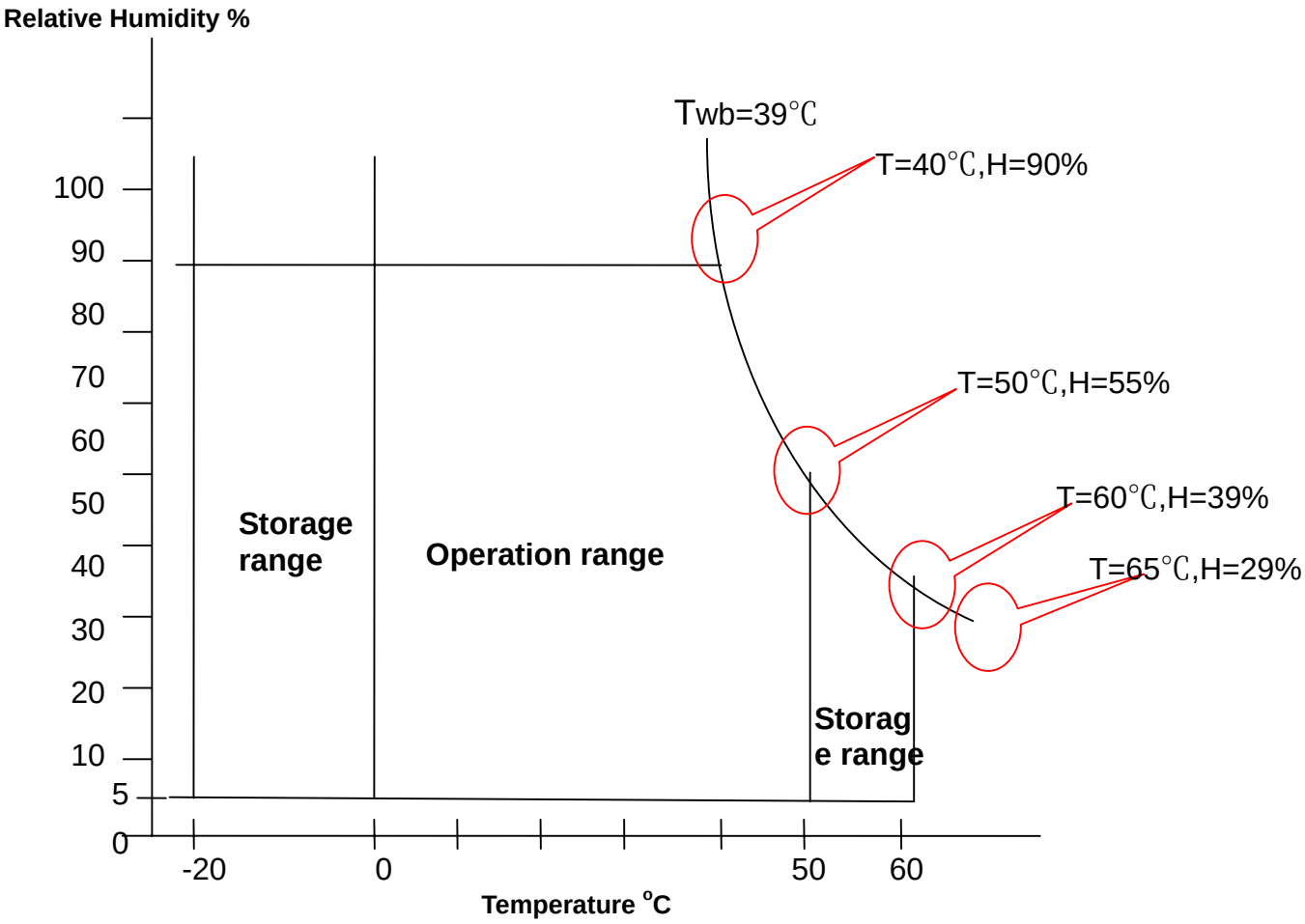

ALL RIGHTS STRICTLY RESERVED. ANY PORTION OF THIS PAPER SHALL NOT BE REPRODUCED, COPIED, OR TRANSFORMED TO ANY OTHER FORMS WITHOUT PREMISSION FROM PROMATE ELECTRONIC CO., LTD

Promate Electronic Co., Ltd.
4F, 32, Sec. 1, Huan Shan RD., Nei Hu, 114, Taipei, R.O.C.
Tel: 886-2-2659-0303 FAX: 886-2-2658-0954

4.0 Optical Characteristics

Optical characteristics are determined after the unit has been 'ON' and stable for approximately 30 minutes in a dark environment at 25 °C. The values specified are at an approximated distance of 50cm from the LCD surface at a viewing angle of 0º.

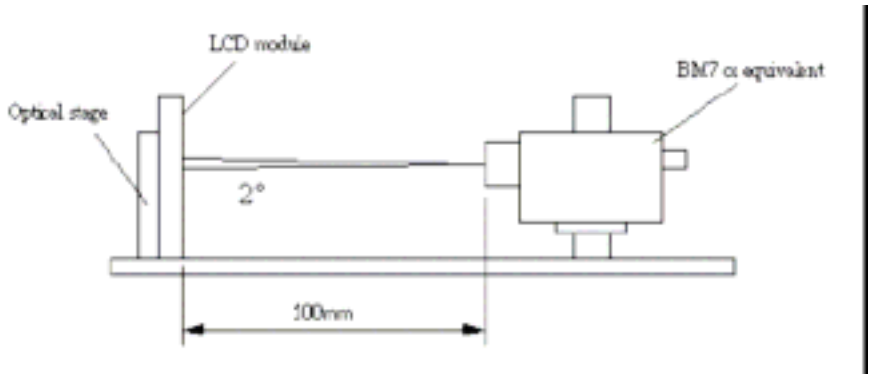

Item	Unit	Conditions	Min.	Typ.	Max.	Note
Viewing Angle	[degree]	Horizontal (Right)	60	70		1
		CR >= 10 (Left)	60	70	-	
	[degree]	Vertical (Upper)	55	65		
		CR >= 10 (Lower)	50	60	-	
Contrast ratio		Normal Direction	400	700	-	2
Response Time(Note 1)	[msec]	Raising Time Ton (10%-90%)	-	5.7		3
	[msec]	Falling Time Toff (90%-10%)	-	2.3		
	[msec]	Raising + Falling	-	8		
Color / Chromaticity Coordinates (CIE)		Red x	0.612	0.642	0.672	
		Red y	0.310	0.337	0.367	
		Green x	0.276	0.306	0.336	
		Green y	0.551	0.581	0.611	
		Blue x	0.114	0.144	0.174	
		Blue y	0.071	0.101	0.131	
Color Coordinates (CIE) White		White x	0.283	0.313	0.343	
		White y	0.299	0.329	0.359	
Brightness Uniformity	[%]		75	80	-	4
White Luminance at CCFL 6.5mA	[cd/m^2]		160	200	-	4
Crosstalk (in 60Hz)	[%]			1.2	1.5	5

Note 1: Viewing Angle:

Viewing angle is the measurement of contrast ratio, at the screen center, over a 180º horizontal and 180º vertical range (off-normal viewing angles). The 180º viewing angle range is broken down

ALL RIGHTS STRICTLY RESERVED. ANY PORTION OF THIS PAPER SHALL NOT BE REPRODUCED, COPIED, OR TRANSFORMED TO ANY OTHER FORMS WITHOUT PREMISSION FROM PROMATE ELECTRONIC CO., LTD

as follows; 90º horizontal left and right and 90º vertical, high (up) and low (down). The measurement direction is typically perpendicular to the display surface with the screen rotated about its center to develop the desired measurement viewing angle.

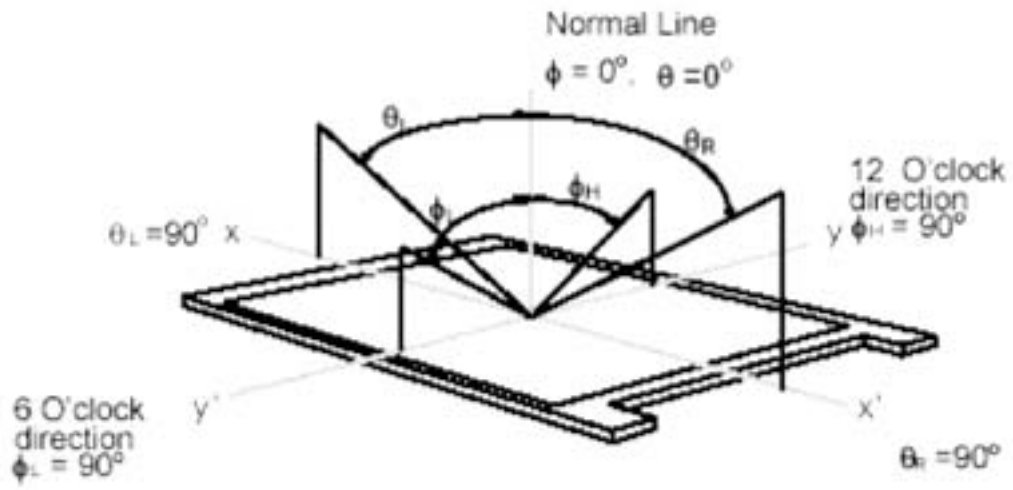

Fig.4-4 Viewing Angle Definition

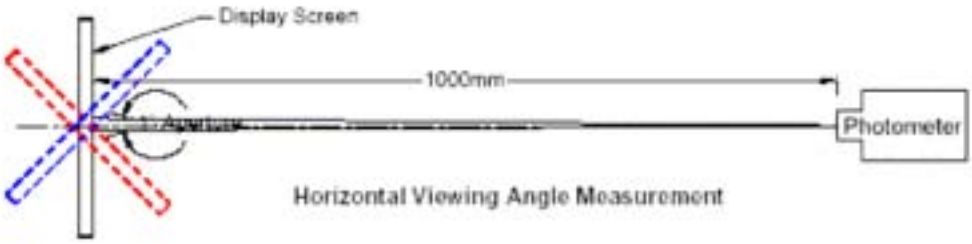

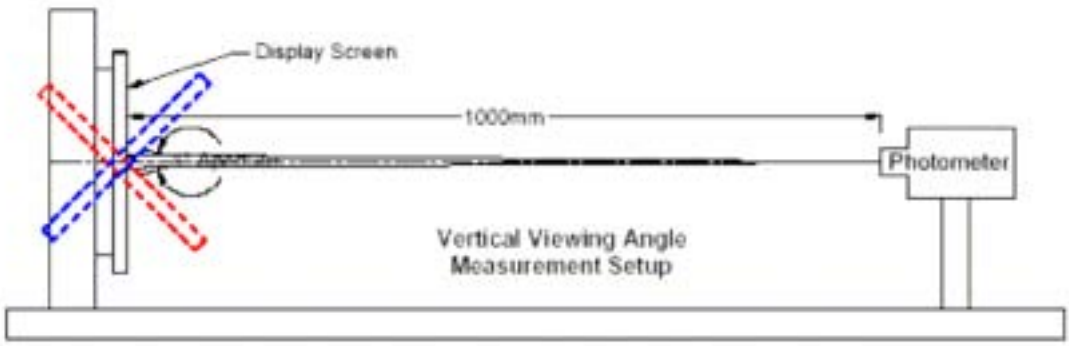

Note 2: Contrast Ratio (CR) is defined mathematically as:

$$\text{Contrast ratio (CR)} = \frac{\text{Brightness on the "white" state}}{\text{Brightness on the "black" state}}$$

ALL RIGHTS STRICTLY RESERVED. ANY PORTION OF THIS PAPER SHALL NOT BE REPRODUCED, COPIED, OR TRANSFORMED TO ANY OTHER FORMS WITHOUT PREMISSION FROM PROMATE ELECTRONIC CO., LTD

Note 3: Definition of Response time:

The output signals of photodetector are measured when the input signals are changed from "Black" to "White" (falling time), and from "White" to "Black" (rising time), respectively. The response time interval between the 10% and 90% of amplitudes. Refer to figure below.

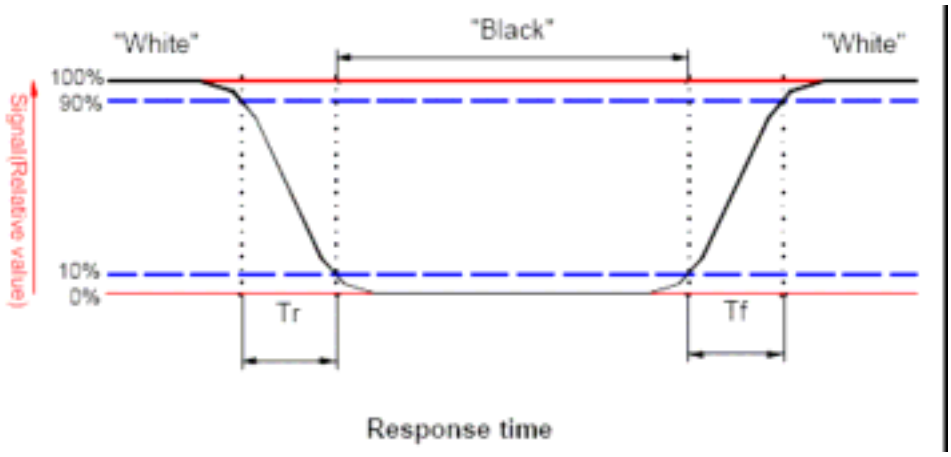

Note 4: Brightness uniformity of these 9 points is defined below:

(Minimum brightness / Maximum brightness) x 100%

Note 5: Crosstalk is defined below:

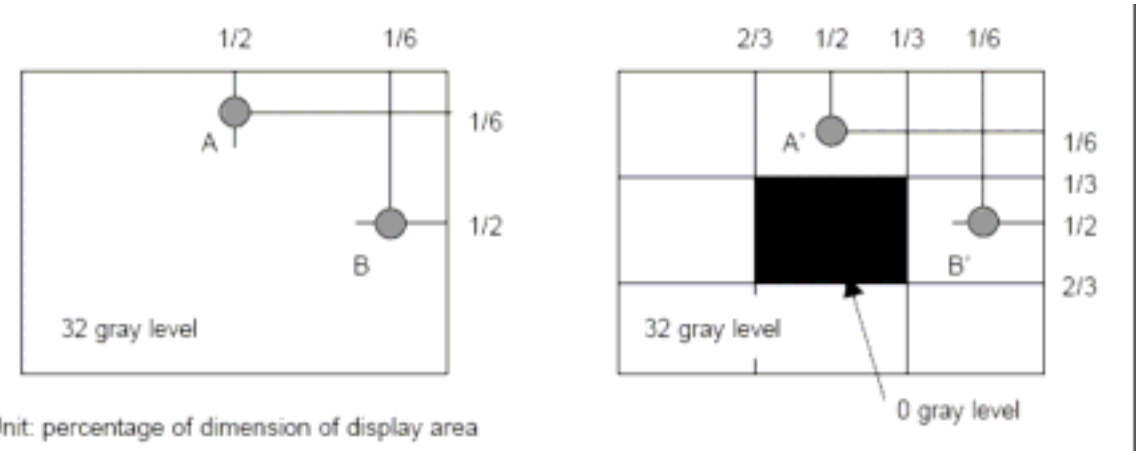

Unit: percentage of dimension of display area

$| L_A - L_{A'} | / L_A \times 100\% = 1.2\%$ max., L_A and L_B are brightness at location A and B

$| L_B - L_{B'} | / L_B \times 100\% = 1.2\%$ max., $L_{A'}$ and $L_{B'}$ are brightness at location A' and B'

ALL RIGHTS STRICTLY RESERVED. ANY PORTION OF THIS PAPER SHALL NOT BE REPRODUCED, COPIED, OR TRANSFORMED TO ANY OTHER FORMS WITHOUT PREMISSION FROM PROMATE ELECTRONIC CO., LTD

Note 6: Brightness is measured at the center point of brightness value with all pixels displaying white.

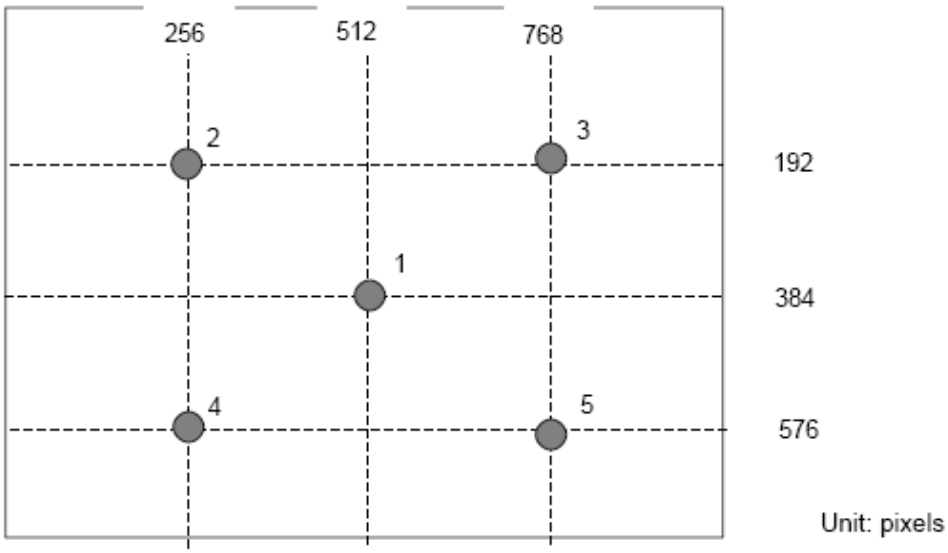

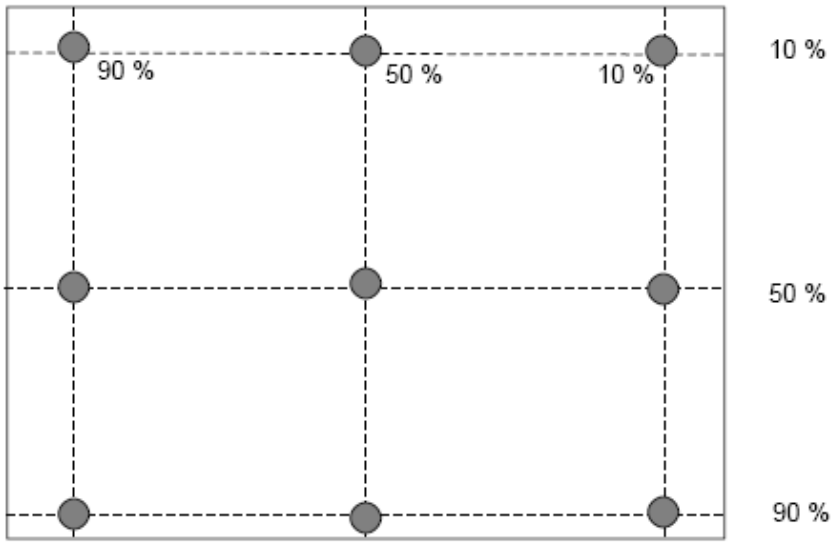

Unit: percentage of dimension of display area

ALL RIGHTS STRICTLY RESERVED. ANY PORTION OF THIS PAPER SHALL NOT BE REPRODUCED, COPIED, OR TRANSFORMED TO ANY OTHER FORMS WITHOUT PREMISSION FROM PROMATE ELECTRONIC CO., LTD

Promate Electronic Co., Ltd.
4F, 32, Sec. 1, Huan Shan RD., Nei Hu, 114, Taipei, R.O.C.
Tel: 886-2-2659-0303 FAX: 886-2-2658-0954

5.0 Signal Interface

5.1 Module Interface Connectors

Physical interface is described for the connector on the module.
These connectors are capable of accommodating the following signals with the following components

Connector Name / Designation	Signal Connector
Manufacturer	E&T or compatible
Connector Model Number	3804-F20N-06R / MSB240420E
Adaptable Plug	HRS DF14-20S-1.25C

5.2 Module Connector Pin Configuration

3804-F20N-06R (E&T) / MSB240420E(STM)		
Pin No.	**Symbol**	**Description**
1	VDD	Power Supply, 3.3V (typical)
2	VDD	Power Supply, 3.3V (typical)
3	VSS	Ground
4	REV	Reverse Scan selection *.Note1
5	Rin0-	- LVDS differential data input (R0-R5, G0)
6	Rin0+	+ LVDS differential data input (R0-R5, G0)
7	VSS	Ground
8	Rin1-	- LVDS differential data input (G1-G5, B0-B1)
9	Rin1+	+ LVDS differential data input (G1-G5, B0-B1)
10	VSS	Ground
11	Rin2-	- LVDS differential data input (B2-B5, HS, VS, DE)
12	Rin2+	+ LVDS differential data input (B2-B5, HS, VS, DE)
13	VSS	Ground
14	ClkIN-	- LVDS differential clock input
15	ClkIN+	+ LVDS differential clock input
16	GND	Ground
17	Rin3-	- LVDS differential data input (R6-R7, G6-G7,B6-B7)
18	Rin3+	- LVDS differential data input (R6-R7, G6-G7,B6-B7)
19	VSS	Ground
20	SEL68	Selection for 6 bits/8bits LVDS data input ***Note1**

ALL RIGHTS STRICTLY RESERVED. ANY PORTION OF THIS PAPER SHALL NOT BE REPRODUCED, COPIED, OR TRANSFORMED TO ANY OTHER FORMS WITHOUT PREMISSION FROM PROMATE ELECTRONIC CO., LTD

5.3 Backlight Connectors

Connector Name / Designation	Lamp Connector
Manufacturer	JST or compatible
Connector Model Number	BDBR-03(4.0)V-S or compatible
Mating Model Number	SM02(8.0)B-BHS-1-TB or compatible

5.4 Backlight Connector Pin Configuration

Pin#	Symbol	Cable color	Signal Name
1	HV	Pink	Lamp High Voltage
2	NC	NC	No Connection
3	LV	White	Ground

- Cable length: 140 +- 5 mm
- Connector-output position: right side(front view)
- Lamp assembly design shall be easy for replacement and repair.

5.5 Signal Electrical Characteristics

Each signal characteristics are as follows:

Item	Symbol	Min	Typ	Max	Unit
LCD Drive voltage	VDD	+3.0	+3.3	+3.6	[V]
“High” input signal voltage	Vih	2.0	-	-	[V]
“Low” input signal voltage	Vil	-	-	0.8	[V]

ALL RIGHTS STRICTLY RESERVED. ANY PORTION OF THIS PAPER SHALL NOT BE REPRODUCED, COPIED, OR TRANSFORMED TO ANY OTHER FORMS WITHOUT PREMISSION FROM PROMATE ELECTRONIC CO., LTD

ALL RIGHTS STRICTLY RESERVED. ANY PORTION OF THIS PAPER SHALL NOT BE REPRODUCED, COPIED, OR TRANSFORMED TO ANY OTHER FORMS WITHOUT PREMISSION FROM PROMATE ELECTRONIC CO., LTD

6-bits input data format

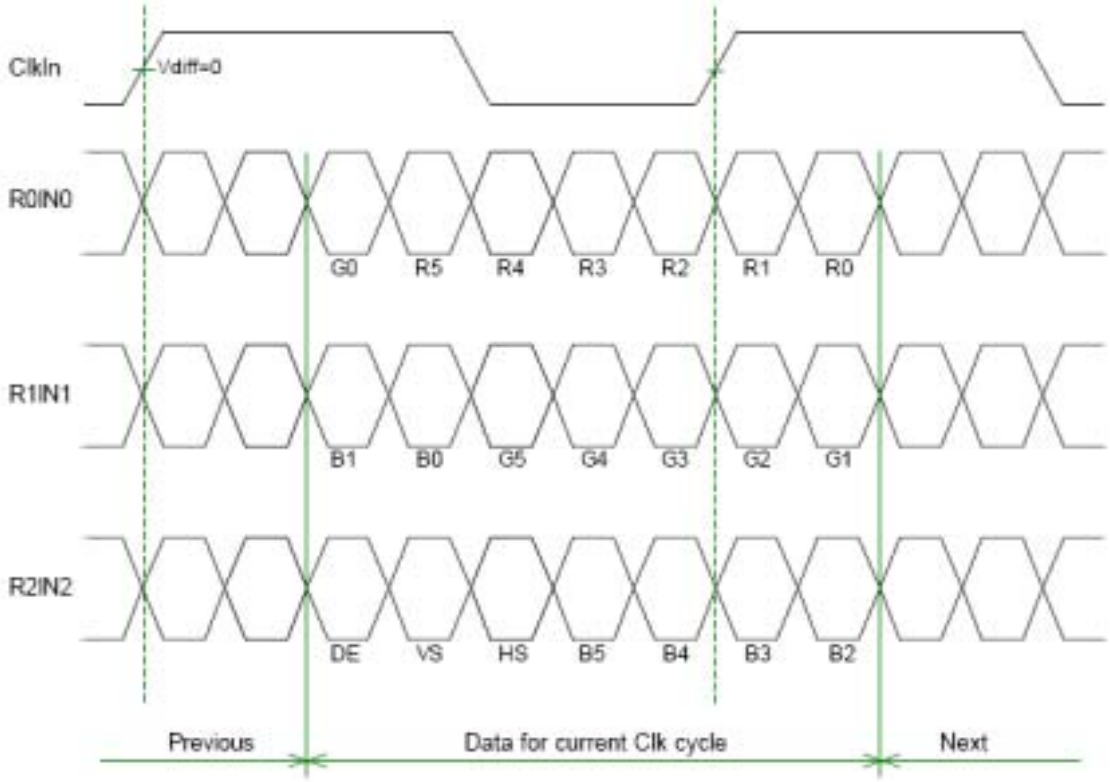

Note: R/G/B data 5: MSB, R/G/B data 0: LSB

Input signals shall be low or Hi-Z state when Vin is off.
It is recommended to refer to the specifications of SN75LVDS82DGG (Texas Instruments) in detail.

Each signal characteristics are as follows:

Parameter	Condition	Min	Max	Unit
Vth	Differential Input High Voltage (Vcm=+1.2V)	-	+100	[mV]
Vtl	Differential Input Low Voltage (Vcm=+1.2V)	-100	-	[mV]

5.6 Interface Timing Characteristics

Basically, interface timing described here is not actual input timing of LCD module but output timing of SN75LVDS82DGG (Texas Instruments) or equivilent.

Signal	Parameter		Symbol	Min.	Typ.	Max.	Unit
Clock Timing	Clock frequency		$1/T_{Clock}$	50	65	81	MHz
Vsync Timing	Vertical Section	Period	T_V	776	806	1024	T_{Line}
		Active	T_{VD}	768	768	768	
		Blanking	T_{VB}	8	38	256	
Hsync Timing	Horizontal Section	Period	T_H	1054	1344	2048	T_{Clock}
		Active	T_{HD}	1024	1024	1024	
		Blanking	T_{HB}	30	320	1024	

ALL RIGHTS STRICTLY RESERVED. ANY PORTION OF THIS PAPER SHALL NOT BE REPRODUCED, COPIED, OR TRANSFORMED TO ANY OTHER FORMS WITHOUT PREMISSION FROM PROMATE ELECTRONIC CO., LTD

Promate Electronic Co., Ltd.
4F, 32, Sec. 1, Huan Shan RD., Nei Hu, 114, Taipei, R.O.C.
Tel: 886-2-2659-0303 FAX: 886-2-2658-0954

Note: Typical value refer to VESA STANDARD

5.7 Interface Timing Definition

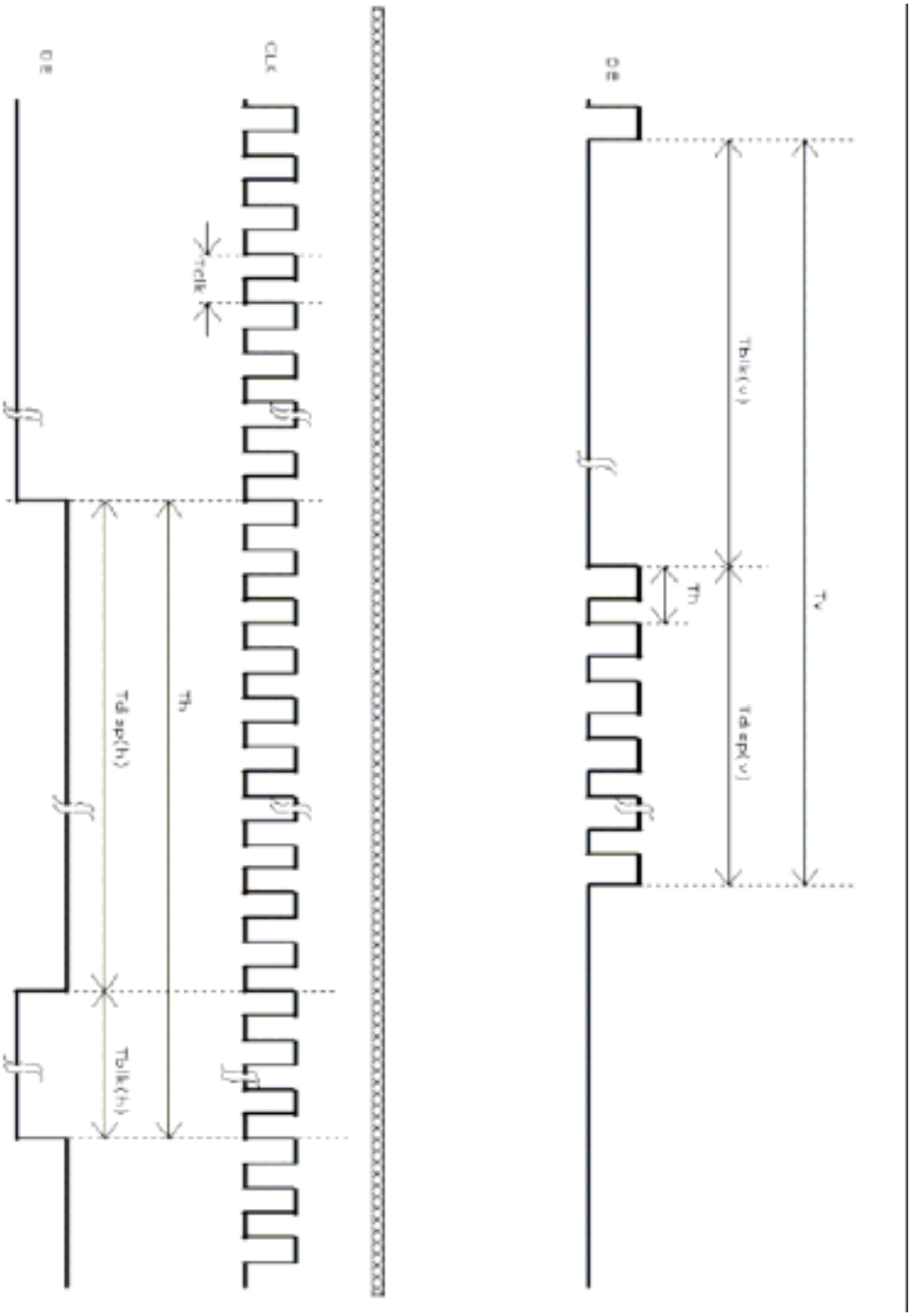

ALL RIGHTS STRICTLY RESERVED. ANY PORTION OF THIS PAPER SHALL NOT BE REPRODUCED, COPIED, OR TRANSFORMED TO ANY OTHER FORMS WITHOUT PREMISSION FROM PROMATE ELECTRONIC CO., LTD

Promate Electronic Co., Ltd.
4F, 32, Sec. 1, Huan Shan RD., Nei Hu, 114, Taipei, R.O.C.
Tel: 886-2-2659-0303 FAX: 886-2-2658-0954

6.0 Pixel format image

The following figure shows the relationship of the input signals and LCD pixel format.

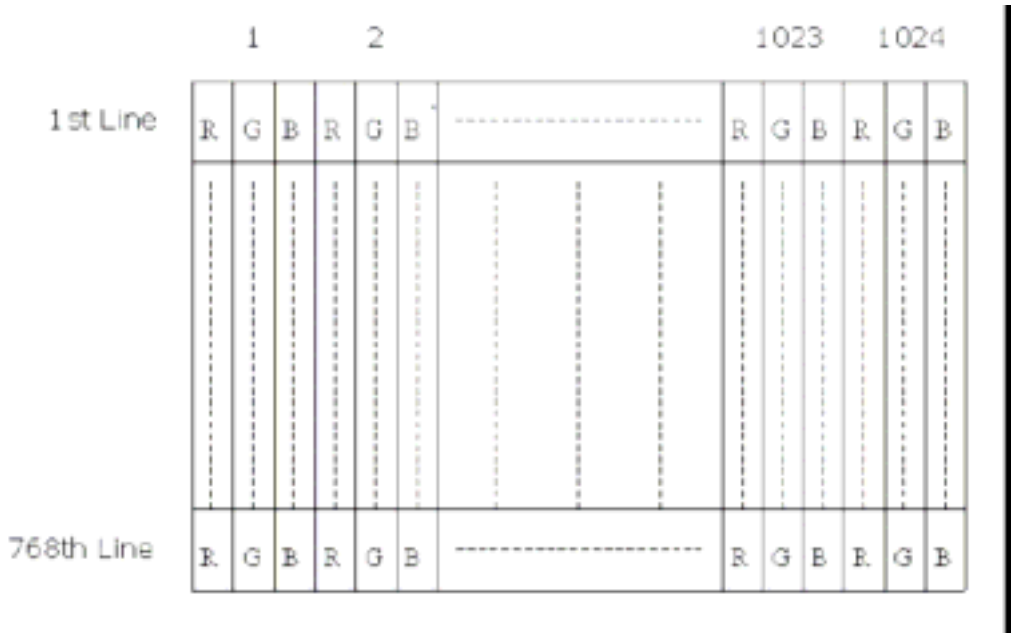

ALL RIGHTS STRICTLY RESERVED. ANY PORTION OF THIS PAPER SHALL NOT BE REPRODUCED, COPIED, OR TRANSFORMED TO ANY OTHER FORMS WITHOUT PREMISSION FROM PROMATE ELECTRONIC CO., LTD

Promate Electronic Co., Ltd.
4F, 32, Sec. 1, Huan Shan RD., Nei Hu, 114, Taipei, R.O.C.
Tel: 886-2-2659-0303 FAX: 886-2-2658-0954

7.0 Power Consumption

Input power specifications are as follows:

Symbol	Parameter	Min	Typ	Max	Units	Remark
VDD	Logic/LCD Drive Voltage	3.0	3.3	3.6	[Volt]	±10%
IDD	VDD Current	-	550	660	[mA]	64 Gray Bar Pattern (VDD=3.3V, at 60Hz)
Irush	LCD Inrush Current	-	-	3	[A]	Note 1
PDD	VDD Power	-	1.9	2.2	[Watt]	64 Gray Bar Pattern (VDD=3.3V, at 60Hz)

8.0 Power ON/OFF Sequence

Vin and lamp power on/off sequence are as follows.The timing of the interface signal are shown below:

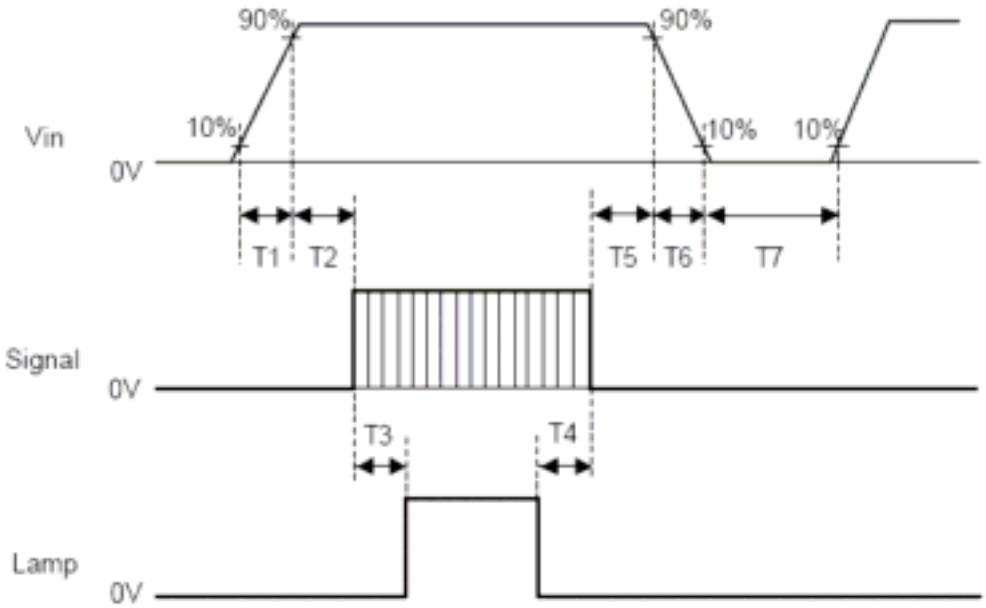

Symbol	Values			Unit
	Min	Typ	Max	
T1	0.5	-	10	[ms]
T2	0.5	25	50	[ms]
T3	200	-	-	[ms]
T4	200	-	-	[ms]
T5	0.5	16	50	[ms]
T6	0.5	-	10	[ms]
T7	1000	-	-	[ms]

ALL RIGHTS STRICTLY RESERVED. ANY PORTION OF THIS PAPER SHALL NOT BE REPRODUCED, COPIED, OR TRANSFORMED TO ANY OTHER FORMS WITHOUT PREMISSION FROM PROMATE ELECTRONIC CO., LTD

9.0 Backlight Characteristics

9.1 Signal for Lamp connector

Pin #	Signal Name
1	Lamp High Voltage
2	No connection
3	Ground

9.2 Parameter guideline for CCFL Inverter

Symbol	Parameter	Min.	Typ.	Max.	Unit	Remark
IRCFL	CCFL operation range	2.5	5.5	6.5	[mA] rms	(Ta=25°C) Note 1
FCFL	CCFL Frequency	40	46	65	[KHz]	(Ta=25°C) Note 2
ViCFL (0°C) (reference)	CCFL Ignition Voltage	-	1080	1290	[Volt] rms	(Ta= 0°C)
ViCFL (25°C) (reference)	CCFL Ignition Voltage	-	860	1030	[Volt] rms	(Ta=25°C)
VCFL	CCFL Discharge Voltage	540	600	660	[Volt] rms	(Ta=25°C) Note 3 IRCFL=5.5mA VCFL = Typ±10%
PCFL	CCFL Power consumption (inverter excluded)	-	6.6	-	[Watt]	(Ta=25°C) Note 3 IRCFL=5.5mA
Lamp Life		50,000	-		Hrs	(Ta=25°C) Note 4 IRCFL = 5.5mA

Note 1: CCFL Frequency should be carefully determined to avoid interference between inverter and TFT LCD

Note 2: Calculator value for reference (IRCFL×VCFLx2=PCFL)

Note 3: CCFL inverter should be able to give out a power that has a generating capacity of over 1450 voltage. Lamp units need 1450 voltage minimum for ignition

Note 4: CCFL life time 50,000hrs at 6.5mA,it's defined as A point of lamp becomes 50% of the initial brightness. It's recommended not to exceed 6.5mA for CCFL life time concern and it's prohibited to exceed 8.5mA for safety concerns.

ALL RIGHTS STRICTLY RESERVED. ANY PORTION OF THIS PAPER SHALL NOT BE REPRODUCED, COPIED, OR TRANSFORMED TO ANY OTHER FORMS WITHOUT PREMISSION FROM PROMATE ELECTRONIC CO., LTD

10.0 Vibration,Shock,and Drop

10.1 Vibration & Shock

The module shall work error free after following vibration and shock condition. Likewise the module shall not sustain any damage after vibration and shock test.

10.1.1 Vibration Test Spec:

- Frequency: 10 - 200Hz
- Sweep: 30 Minutes each Axis (X, Y, Z)
- Acceleration: 1.5G(10~200Hz P- P)
- Test method:

Acceleration (G)	1.5
Frequency (Hz)	10~200~10
Active time (min)	30

10.1.2 Shock Test Spec:

Acceleration (G)	50
Active time(ms)	20
Wave form	Half-sin
Times	1

- Direction: ±X , ±Y, ±Z

10.2 Drop

Package test: The drop height is defined as 60 cm.

(1 corner,3 edges,6 flat faces)
-- No damage and defect found for panel.

ALL RIGHTS STRICTLY RESERVED. ANY PORTION OF THIS PAPER SHALL NOT BE REPRODUCED, COPIED, OR TRANSFORMED TO ANY OTHER FORMS WITHOUT PREMISSION FROM PROMATE ELECTRONIC CO., LTD

11.0 Environment

The display module will meet the provision of this specification during operating condition or after storage or shipment condition specified below. Operation at 10% beyond the specified range will not cause physical damage to the unit.

11.1 Temperature and Humidity

11.1.1 Operating Conditions

The display module operates error free, when operated under the following conditions;

Temperature	0 ^{0}C to 60 ^{0}C
Relative Humidity	20% to 85%
Wet Bulb Temperature	39.0 ^{0}C

11.1.2 Shipping Conditions

The display module operates error free, after the following conditions;

Temperature	-20 ^{0}C to 65 ^{0}C
Relative Humidity	5% to 95%
Wet Bulb Temperature	39.0 ^{0}C

11.2 Atmospheric Pressure

The display assembly is capable of being operated without affecting its operations over the pressure range as following specified:

	Pressure	**Altitude**
Maximum Pressure	1040 hPa	0 m = sea level
Minimum Pressure	601 hPa	3658 m = 12,000 feet

Note: Non-operation altitude limit of this display module = 40,000 feet. = 12193 m.

11.3 Thermal Shock

The display module will not sustain damage after being subjected to 100 cycles of rapid temperature change. A cycle of rapid temperature change consists of varying the temperature from -20^{0}C to 60^{0}C, and back again.

Thermal shock cycle -20 ^{0}C for 30min
60 ^{0}C for 30min

Power is not applied during the test. After temperature cycling, the unit is placed in normal room ambient for at least 4 hours before powering on.

ALL RIGHTS STRICTLY RESERVED. ANY PORTION OF THIS PAPER SHALL NOT BE REPRODUCED, COPIED, OR TRANSFORMED TO ANY OTHER FORMS WITHOUT PREMISSION FROM PROMATE ELECTRONIC CO., LTD

12.0 Reliability

This display module and the packaging of that will comply following standards.

12.1 Failure Criteria

The display assembly will be considered as failing unit when it no longer meets any of the requirements stated in this specification. Only as for maximum white luminance, following criteria is applicable.
Note: Maximum white Luminance shall be 75 cd/m^2 or more.

12.2 Failure Rate

The average failure rate of the display module (from first power-on cycle till 1,000 hours later) will not exceed1.0%. The average failure rate of the display module from 1,000 hours until 10,000 hours will not exceed 0.70% per 1000 hours.

12.2.1 Usage

The assumed usage for the above criteria is:

- 220 power-on hours per month
- 500 power on/off cycles per month
- Maximum brightness setting
- Operation to be within office environment (25^{0}C typical)

12.2.2 Component De-rating

All the components used in this device will be checked the load condition to meet the failure rate criteria.

12.3 CCFL Life

The assumed CCFL Life will be longer than 50,000 hours under stable condition at 25±5 ^{0}C;
Standard current at 6.5 ±0.5 mA
Definition of life: brightness becomes 50% or less than the minimum luminance value of CCFL.

12.4 ON/OFF Cycle

The display module will be capable of being operated over the following ON/OFF Cycles.

ON/OFF	Value	Cycle
+VDD and CCFL power	36,000	10 seconds on / 10 seconds off

ALL RIGHTS STRICTLY RESERVED. ANY PORTION OF THIS PAPER SHALL NOT BE REPRODUCED, COPIED, OR TRANSFORMED TO ANY OTHER FORMS WITHOUT PREMISSION FROM PROMATE ELECTRONIC CO., LTD

13.0 Safety

13.1 Sharp Edge Requirements

There will be no sharp edges or corners on the display assembly that could cause injury.

13.2 Materials

13.2.1 Toxicity

There will be no carcinogenic materials used anywhere in the display module. If toxic materials are used, they will be reviewed and approved by the responsible AUO Toxicologist.

13.2.2 Flammability

All components including electrical components that do not meet the flammability grade UL94-V1 in the module will complete the flammability rating exception approval process. The printed circuit board will be made from material rated 94-V1 or better. The actual UL flammability rating will be printed on the printed circuit board.

14.0 Other Requirements

14.1 Smoke Free Design

By any single failure, any smoke nor strange smell shall not be observed by the operator.

14.2 National Test Lab Requirement

The display module will satisfy all requirements for compliance to the following requirement:

UL 1950, First Edition	U.S.A. Information Technology Equipment
CSA C22.2 No.950-M89	Canada, Information Technology Equipment
IEC 950	International, Information Technology Equipment
EN 60 950	International, Information Processing Equipment (European Norm for IEC950)

The construction of the display module is designed to suppress EMI. When mounted into a specified host system, the system will meet the following EMI requirement:

FCC Part 15 Class B
VCCI Class 2
CISPR 22, class B
Taiwan CNS standard
China CCIB standard

ALL RIGHTS STRICTLY RESERVED. ANY PORTION OF THIS PAPER SHALL NOT BE REPRODUCED, COPIED, OR TRANSFORMED TO ANY OTHER FORMS WITHOUT PREMISSION FROM PROMATE ELECTRONIC CO., LTD

15.0 Packaging

CARTON +
BOTTOM EPE

UPPER EPE +
97G150X3N0F-2

SIDE EPE

NOTES:
1.MAX. CAPACITY : 10 PCS/CARTON .
2.CARTON DIM. : 397mmx321mmx340mm.

10pcs / carton.
Carton dimension: 391 x 321 x 340 (mm)
Max weight:: around 14.8 kg per carton

ALL RIGHTS STRICTLY RESERVED. ANY PORTION OF THIS PAPER SHALL NOT BE REPRODUCED, COPIED, OR TRANSFORMED TO ANY OTHER FORMS WITHOUT PREMISSION FROM PROMATE ELECTRONIC CO., LTD

Promate Electronic Co., Ltd.
4F, 32, Sec. 1, Huan Shan RD., Nei Hu, 114, Taipei, R.O.C.
Tel: 886-2-2659-0303 FAX: 886-2-2658-0954

16.0 Mechanical Characteristics

16.1 Assembly Dimensions

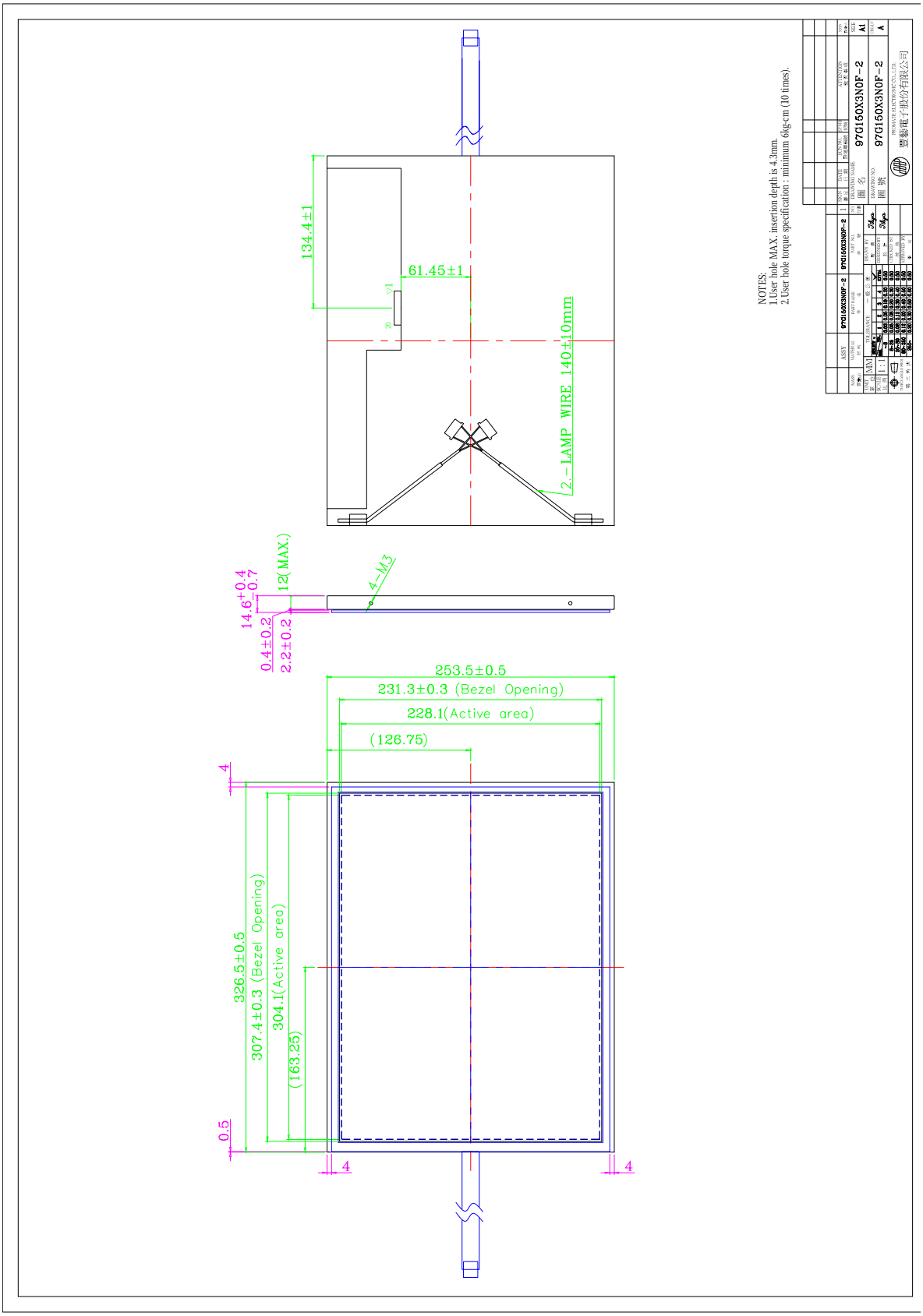

ALL RIGHTS STRICTLY RESERVED. ANY PORTION OF THIS PAPER SHALL NOT BE REPRODUCED, COPIED, OR TRANSFORMED TO ANY OTHER FORMS WITHOUT PREMISSION FROM PROMATE ELECTRONIC CO., LTD

Promate Electronic Co., Ltd
4F, 32, Sec. 1, Huan Shan RD., Nei Hu, 104, Taipei, R.O.C.
Tel: 886-2-2659-0303 FAX: 886-2-2658-0954

16.2 TFT LCD Panel (Front View)

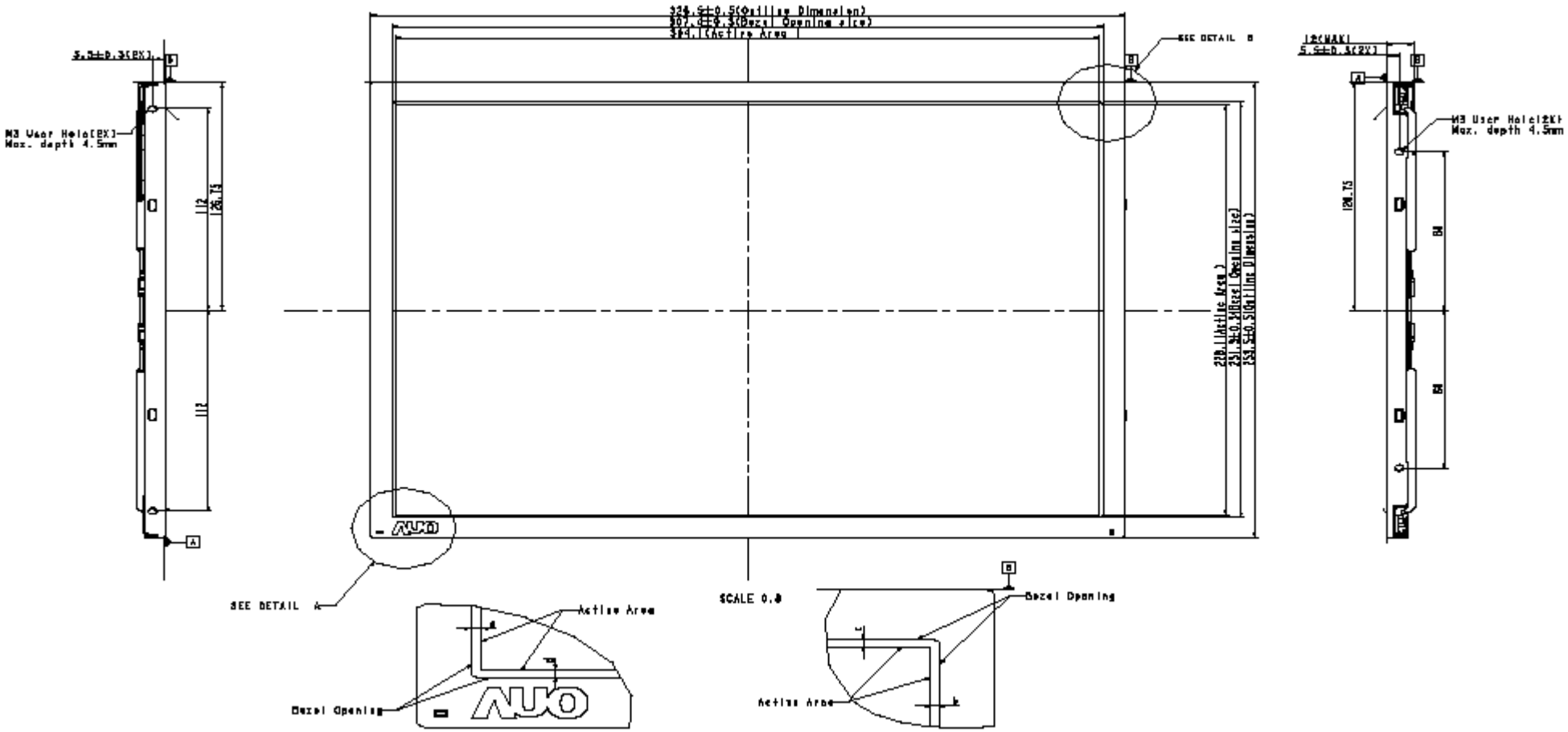

ALL RIGHTS STRICTLY RESERVED. ANY PORTION OF THIS PAPER SHALL NOT BE REPRODUCED, COPIED, OR TRANSFORMED TO ANY OTHER FORMS WITHOUT PREMISSION FROM PROMATE ELECTRONIC CO., LTD.

Promate Electronic Co., Ltd
4F, 32, Sec. 1, Huan Shan RD., Nei Hu, 104, Taipei, R.O.C.
Tel: 886-2-2659-0303 FAX: 886-2-2658-0954

16.3 Higgstec 5-Wire Touch Sensor

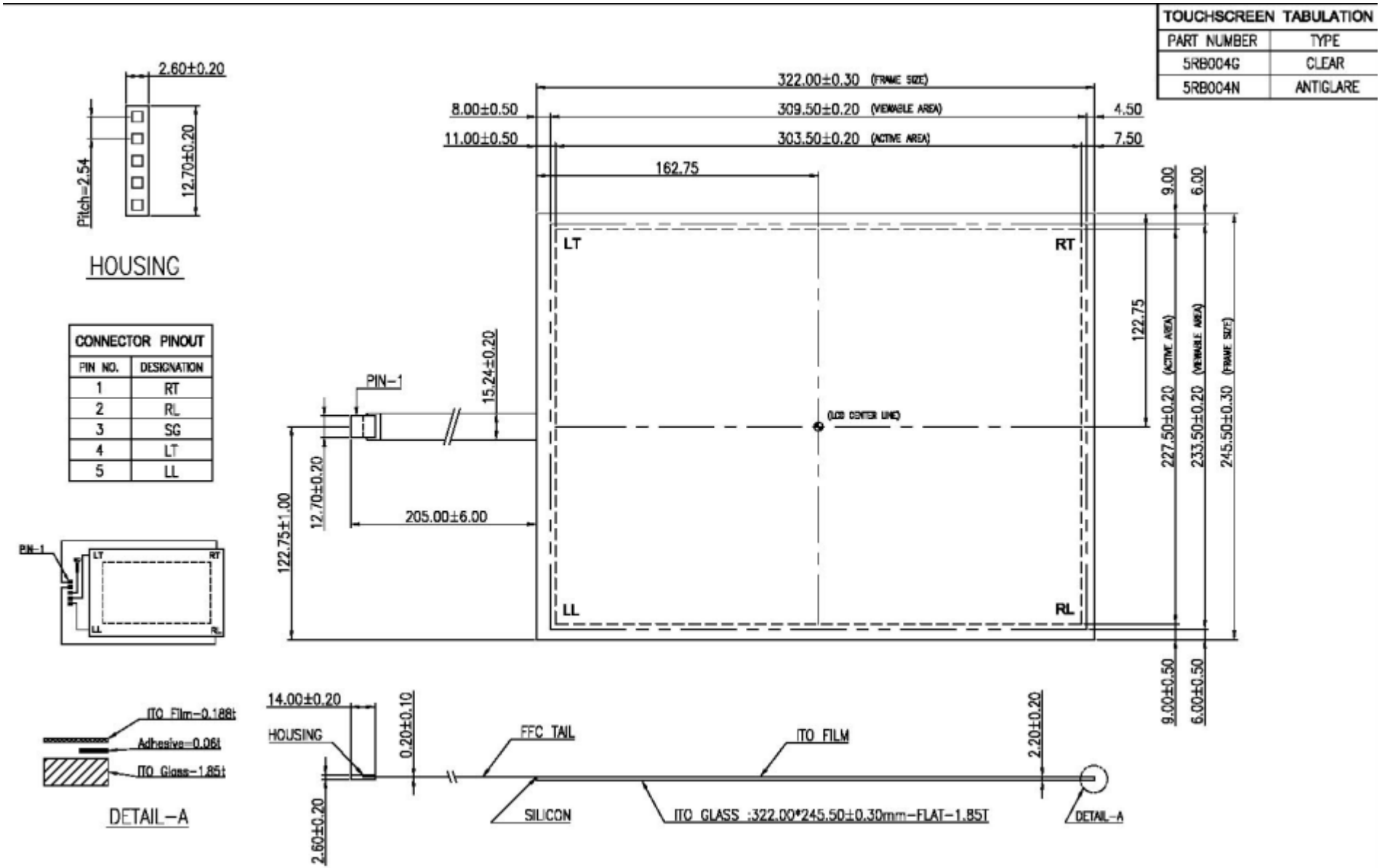

ALL RIGHTS STRICTLY RESERVED. ANY PORTION OF THIS PAPER SHALL NOT BE REPRODUCED, COPIED, OR TRANSFORMED TO ANY OTHER FORMS WITHOUT PREMISSION FROM PROMATE ELECTRONIC CO., LTD.