SmarterGlass

state-of-the-art display solutions

www.smarterglass.com
978 997 4104
sales@smarterglass.com

Product Specification

AU OPTRONICS CORPORATION

( ) Preliminary Specifications
(V) Final Specifications

Module	**" WSVGA Color TFT-LCD with LED Backlight design**
Model Name	B089AW01 V0
Note ( )	***LED Backlight with driving circuit design***

Customer	**Date**
Checked & Approved by	**Date**
_____	_____

Approved by	**Date**
Jerry Chen	06/02/2008
Prepared by	
Ivy Lee	06/02/2008

Note: This Specification is subject to change without notice.

NBBU Marketing Division / AU Optronics corporation

Contents

1. Handling Precautions 4
2. General Description 5
2.1 General Specification 5
2.2 Optical Characteristics 6
3. Functional Block Diagram 11
4. Absolute Maximum Ratings 11
4. Absolute Maximum Ratings 12
4.1 Absolute Ratings of TFT LCD Module 12
4.2 Absolute Ratings of Backlight Unit 12
4.3 Absolute Ratings of Environment 12
5. Electrical characteristics 13
5.1 TFT LCD Module 13
5.2 Backlight Unit 15
6. Signal Characteristic 16
6.1 Pixel Format Image 16
6.2 The input data format 17
6.3 Signal Description/Pin Assignment 18
6.4 Interface Timing 21
6.5 Power Sequence 23
7. Connector Description 24
7.1 TFT LCD Module 24
8. 8. LED Driving Specification 25
8.1 Connector Description 25
8.2 Pin Assignment 25
9. Reliability 26
10. Mechanical Characteristics 27
10.1 LCM Outline Dimension 27
10.2 Screw Hole Depth and Center Position 29
11. Shipping and Package 30
11.1 Shipping Label Format 30
11.2 Carton package 31
11.3 Shipping package of palletizing sequence 31
12. Appendix: EDID description 32

Record of Revision

Version and Date	Page	Old description	New Description	Remark
0.1 2008/03/31	All	First Edition for Customer		
1.0 2008/05/20	All	Preliminary spec	Final spec	
1.1 2008/06/03	19, 26	Pin assignment Pin pins à NC or ENB pin input	Pin assgnment 39 pins à ENB pin input	
1.2 2008/06/03	15	LED parameter and symbal	Update	

1. Handling Precautions

1) Since front polarizer is easily damaged, pay attention not to scratch it.
2) Be sure to turn off power supply when inserting or disconnecting from input connector.
3) Wipe off water drop immediately. Long contact with water may cause discoloration or spots.
4) When the panel surface is soiled, wipe it with absorbent cotton or other soft cloth.
5) Since the panel is made of glass, it may break or crack if dropped or bumped on hard surface.
6) Since CMOS LSI is used in this module, take care of static electricity and insure human earth when handling.
7) Do not open nor modify the Module Assembly.
8) Do not press the reflector sheet at the back of the module to any directions.
9) At the insertion or removal of the Signal Interface Connector, be sure not to rotate nor tilt the Interface Connector of the TFT Module.
11) After installation of the TFT Module into an enclosure (Notebook PC Bezel, for example), do not twist nor bend the TFT Module even momentary. At designing the enclosure, it should be taken into consideration that no bending/twisting forces are applied to the TFT Module from outside. Otherwise the TFT Module may be damaged.
12) Small amount of materials having no flammability grade is used in the LCD module. The LCD module should be supplied by power complied with requirements of Limited Power Source (IEC60950 or UL1950), or be applied exemption.
13) Disconnecting power supply before handling LCD modules, it can prevent electric shock, DO NOT TOUCH the electrode parts, cables, connectors and LED circuit part of TFT module that a LED light bar build in as a light source of back light unit. It can prevent electrostic breakdown.

2. General Description

B089AW01 V0 is a Color Active Matrix Liquid Crystal Display composed of a TFT LCD panel, a driver circuit, and LED backlight system. The screen format is intended to support the WSVGA (1024(H) x 600(V)) screen and 262k colors (RGB 6-bits data driver) with LED backlight driving circuit. All input signals are LVDS interface compatible.

B089AW01 V0 is designed for a display unit of notebook style personal computer and industrial machine.

2.1 General Specification

The following items are characteristics summary on the table at 25 ℃ condition:

Items	Unit	Specifications
Screen Diagonal	[mm]	226.06(W")
Active Area	[mm]	195.07(H) X 113.4(V)
Pixels H x V		1024x3(RGB) x 600
Pixel Pitch	[mm]	0.1905 (H) x 0.189 (V)
Pixel Arrangement		R.G.B. Vertical Stripe
Display Mode		Normally White
White Luminance Note: I_{LED} is LED current	[cd/m^2]	180 typ. (center) 150 min. (center) (Note1)
Luminance Uniformity		1.6 max. (13 points)
Contrast Ratio		300 typ
Response Time	[ms]	30 typ / 50 max
Nominal Input Voltage VDD	[Volt]	+3.3 typ.
Power Consumption	[Watt]	3.0 max. (Include Logic and Black Light power)
Weight	[Grams]	190 max.
Physical Size	[mm]	
Electrical Interface		1 channel LVDS
Surface Treatment		Anti- Glare

	L	W	T
Max	213.66	129.85	5.45
Typical	213.36	129.55	5.15
Min	-	-	-

Support Color		262K colors (RGB 6-bit)
Temperature Range Operating Storage (Non-Operating)	 [°C] [°C]	 0 to +50 -20 to +65
RoHS Compliance		RoHS Compliance

2.2 Optical Characteristics

The optical characteristics are measured under stable conditions at 25℃ (Room Temperature) :

Item	Unit	Conditions	Min.	Typ.	Max.	Note
White Luminance	**[cd/m²]**	**Center**	**150**	**180**	**-**	1, 4, 5.
Viewing Angle	**[degree]** **[degree]**	**Horizontal (Right)** **CR = 10 (Left)**	**-** **-**	**45** **45**	**-** **-**	4,9
	[degree] **[degree]**	**Vertical (Upper)** **CR = 10 (Lower)**	**-** **-**	**15** **35**	**-** **-**	
Luminance Uniformity		**13 Points**	**-**	**-**	**1.6**	2,3,4
CR: Contrast Ratio			**200**	**300**	**-**	4,6
Cross talk	**%**				**4**	4,7
Response Time	**[msec]**	**Rising**	**-**	**12**	**20**	4,8
	[msec]	**Falling**	**-**	**18**	**30**	
	[msec]	**Rising + Falling**	**-**	**30**	**50**	
Chromaticity of color Coordinates (CIE 1931)		**Red x**	**0.535**	**0.585**	**0.635**	4,9
		Red y	**0.304**	**0.354**	**0.404**	
		Green x	**0.29**	**0.34**	**0.39**	
		Green y	**0.529**	**0.579**	**0.629**	
		Blue x	**0.092**	**0.142**	**0.192**	
		Blue y	**0.048**	**0.098**	**0.148**	
		White x	**0.263**	**0.313**	**0.363**	
		White y	**0.279**	**0.329**	**0.379**	

Note 1 : 13 points position (Ref: Active area)

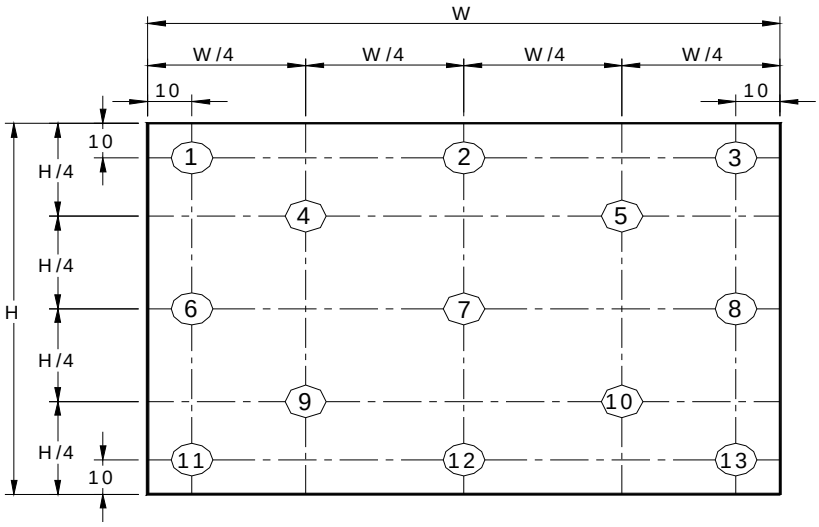

Note 3: The luminance uniformity of 5 or13 points is defined by dividing the maximum luminance values by the minimum test point luminance

$$\delta_{W5} = \frac{\text{Maximum Brightness of five points}}{\text{Minimum Brightness of five points}}$$

$$\delta_{W13} = \frac{\text{Maximum Brightness of thirteen points}}{\text{Minimum Brightness of thirteen points}}$$

Note 4: Measurement method

The LCD module should be stabilized at given temperature for 30 minutes to avoid abrupt temperature change during measuring. In order to stabilize the luminance, the measurement should be executed after lighting Backlight for 30 minutes in a stable, windless and dark room.

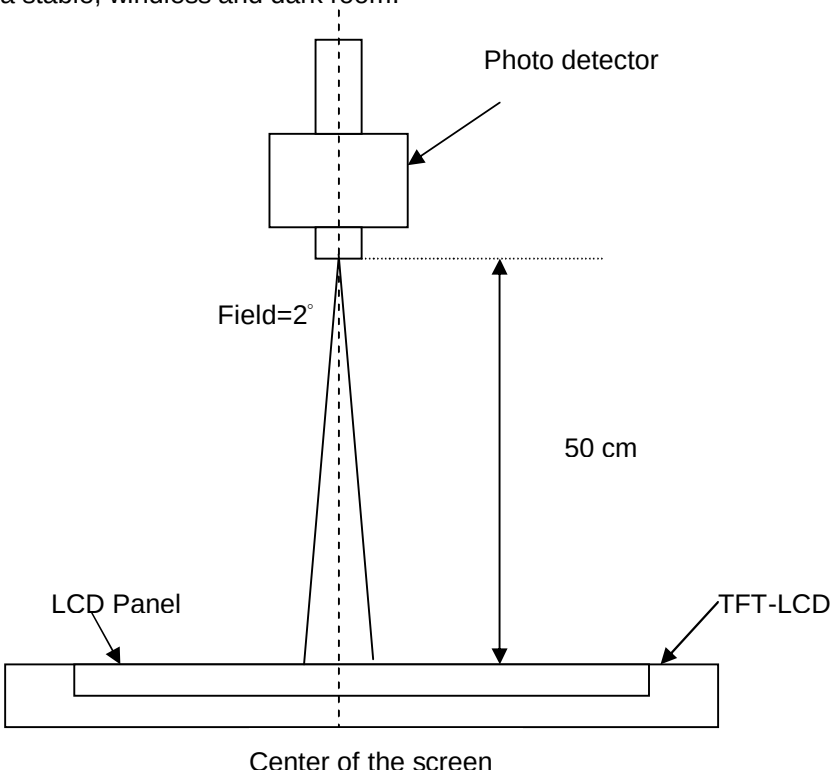

Note 5： Definition of Average Luminance of White (Y_L):

Measure the luminance of gray level 63 at 5 points，Y_L = [L (1)+ L (2)+ L (3)+ L (4)+ L (5)] / 5

L (x) is corresponding to the luminance of the point X at Figure in Note (1).

Note 6： Definition of contrast ratio:

Contrast ratio is calculated with the following formula.

$$\text{Contrast ratio (CR)} = \frac{\text{Brightness on the “White” state}}{\text{Brightness on the “Black” state}}$$

Note 7： Definition of Cross Talk (CT)

$CT = | Y_B – Y_A | / Y_A \times 100$ (%)

Where

Y_A = Luminance of measured location without gray level 0 pattern (cd/m2)

Y_B = Luminance of measured location with gray level 0 pattern (cd/m2)

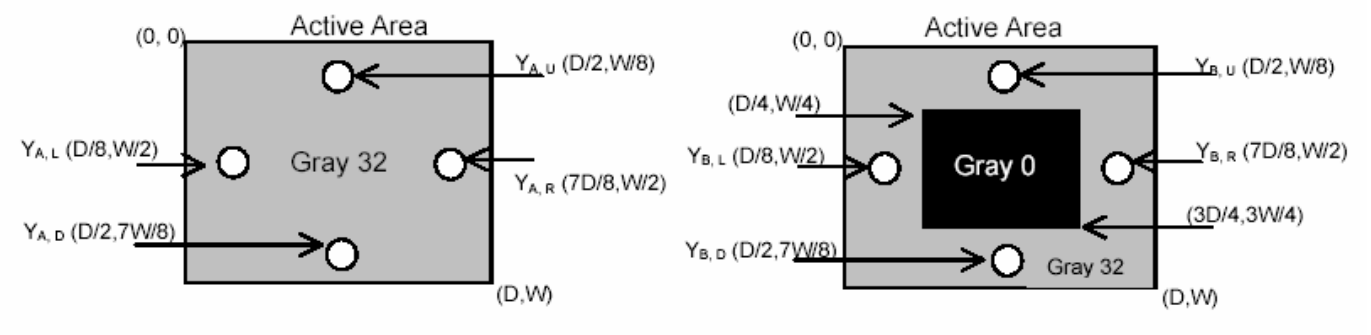

Note 8: Definition of response time:

The output signals of BM-7 or equivalent are measured when the input signals are changed from“Black” to “White” (falling time) and from “White” to “Black” (rising time), respectively. The response time interval between the 10% and 90% of amplitudes. Refer to figure as below.

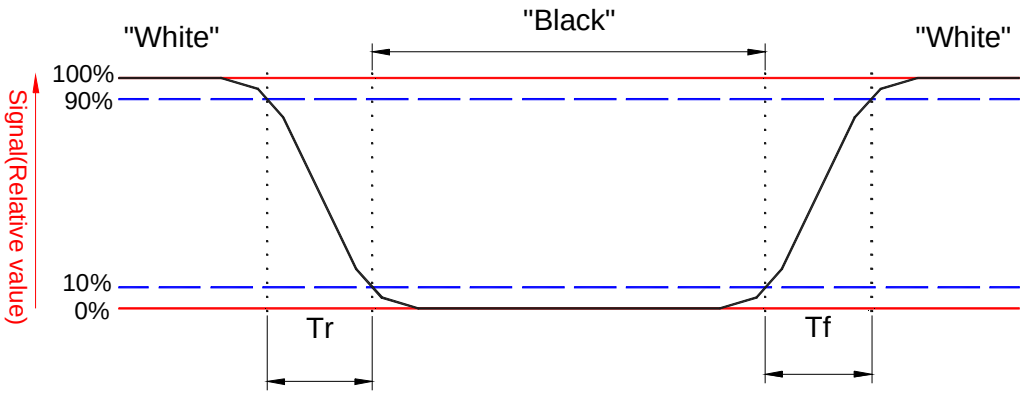

Note 8. Definition of viewing angle

Viewing angle is the measurement of contrast ratio ≧10, at the screen center, over a 180° horizontal and 180° vertical range (off-normal viewing angles). The 180° viewing angle range is broken down as follows; 90° (θ) horizontal left and right and 90° (Φ) vertical, high (up) and low (down). The measurement direction is typically perpendicular to the display surface with the screen rotated about its center to develop the desired measurement viewing angle.

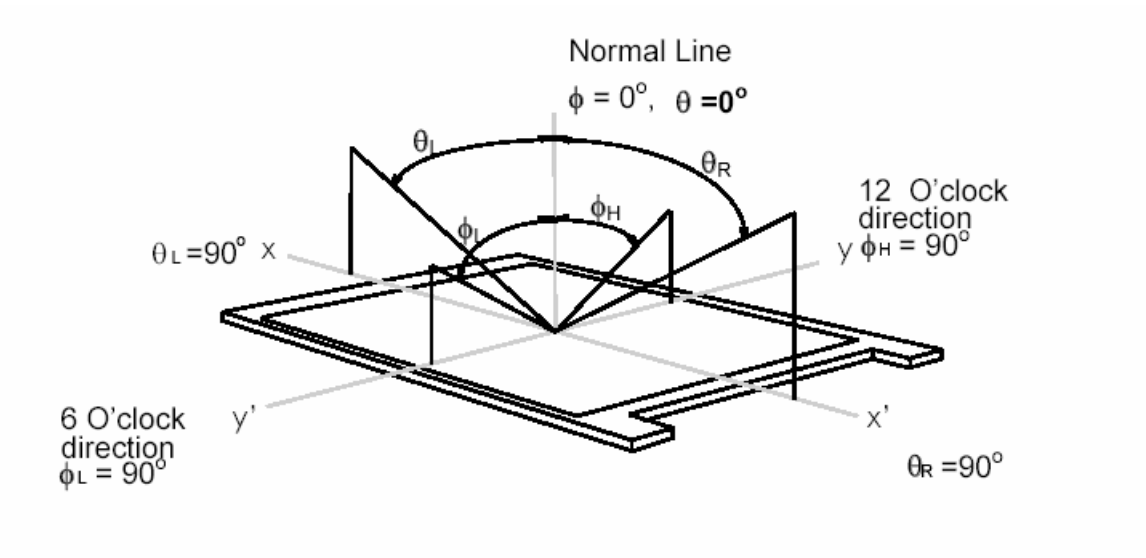

3. Functional Block Diagram

The following diagram shows the functional block of the 8.9 inches wide Color TFT/LCD 40 Pin (One ch/connector Module:

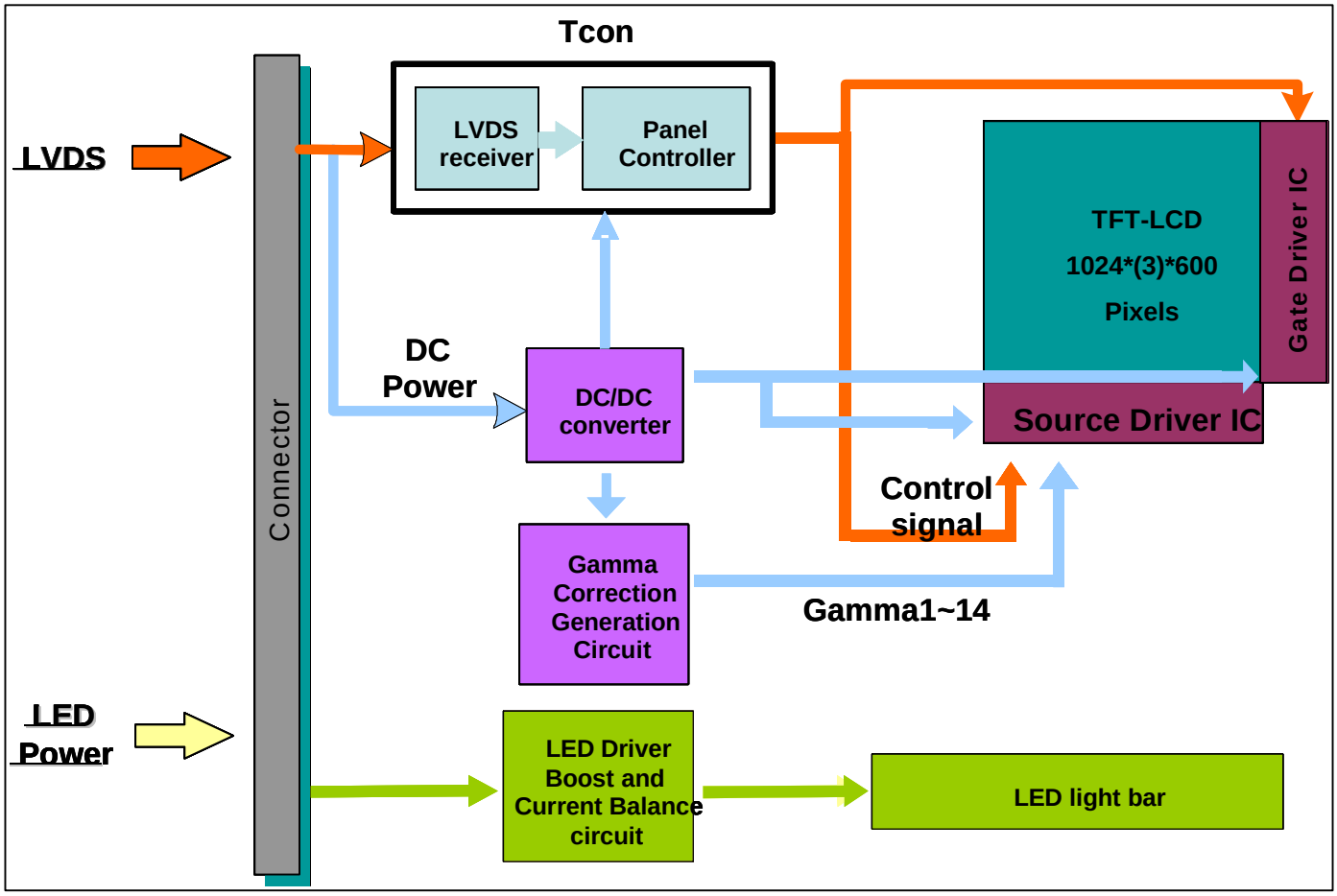

4. Absolute Maximum Ratings

An absolute maximum rating of the module is as following:

4.1 Absolute Ratings of TFT LCD Module

Item	Symbol	Min	Max	Unit	Conditions
Logic/LCD Drive	Vin	-0.3	+4.0	[Volt]	Note 1,2

4.2 Absolute Ratings of Backlight Unit

Item	Symbol	Min	Max	Unit	Conditions
LED Driving Voltage	V_{LED}	-	36 (Row Output)	[Volt]	Note 1,2,3
LED Driving Current	I_{LED}	-	30 (Row Output)	[mA] rms	Note 1,2,3

4.3 Absolute Ratings of Environment

Item	Symbol	Min	Max	Unit	Conditions
Operating Temperature	TOP	0	+50	[^{o}C]	Note 4
Operation Humidity	HOP	8	95	[%RH]	Note 4
Storage Temperature	TST	-20	+65	[^{o}C]	Note 4
Storage Humidity	HST	5	95	[%RH]	Note 4

Note 1: At Ta (25℃)

Note 2: Permanent damage to the device may occur if exceed maximum values

Note 3: LED specification refer to section 5.2

Note 4: For quality performance, please refer to AUO IIS (Incoming Inspection Standard).

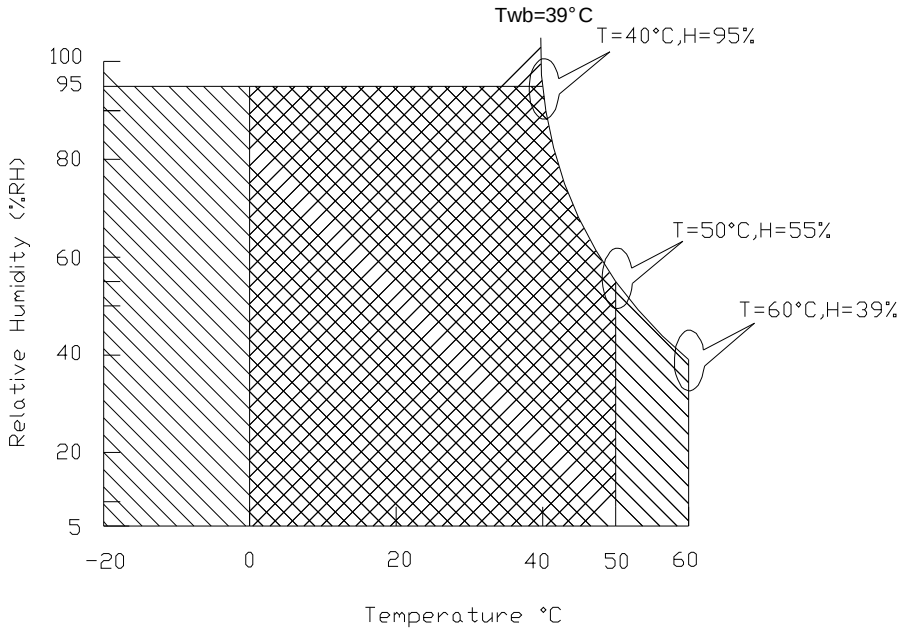

Operating Range Storage Range +

5. Electrical characteristics

5.1 TFT LCD Module

5.1.1 Power Specification

Input power specifications are as follows;

Symble	Parameter	Min	Typ	Max	Unit	Note
VDD	Logic/LCD Drive Voltage	3.0	3.3	3.6	[Volt]	
PDD	VDD Power	-	0.86	1	[Watt	Note 1/2
IDD	IDD Current	-	260	280	[mA]	Note 1/2
IRush	Inrush Current	-	650	--	[mA]	Note 3
VDDrp	Allowable Logic/LCD Drive Ripple Voltage	-	-	100	[mV] p-p	

Note 1 : Maximum Measurement Condition：Black Pattern

Note 2：Typical Measurement Condition: Mosaic Pattern

Note 3：Measure Condition

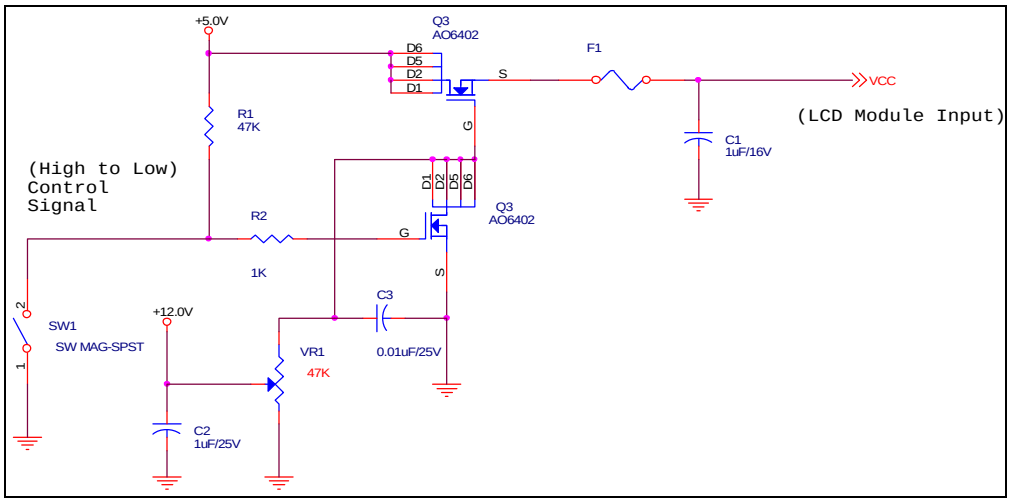

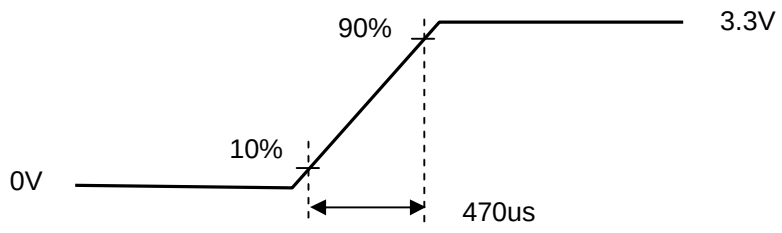

Vin rising time

5.1.2 Signal Electrical Characteristics

Input signals shall be low or High-impedance state when VDD is off.

It is recommended to refer the specifications of SN75LVDS82DGG (Texas Instruments) in detail.

Signal electrical characteristics are as follows;

Parameter	Condition	Min	Max	Unit
Vth	Differential Input High Threshold (Vcm=+1.2V)	-	100	[mV]
Vtl	Differential Input Low Threshold (Vcm=+1.2V)	-100	-	[mV]
Vcm	Differential Input Common Mode Voltage	1.125	1.375	[V]

Note: LVDS Signal Waveform

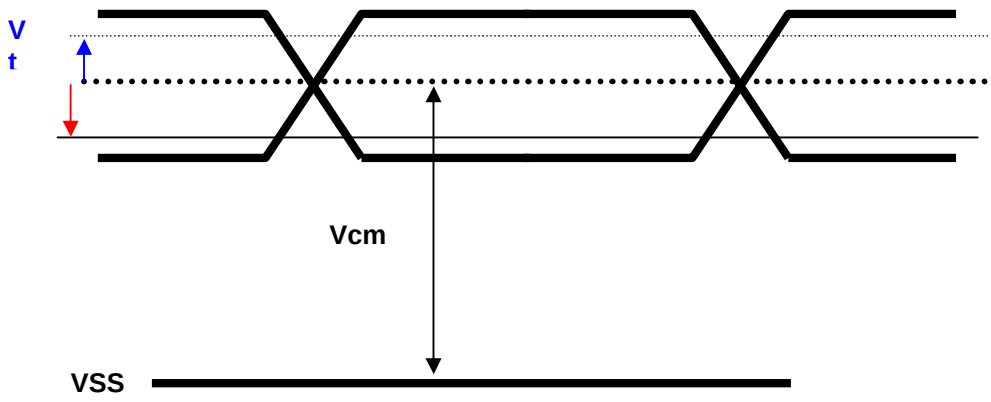

5.2 Backlight Unit

Parameter	Symbol	Min	Typ	Max	Units	Condition
LED Circuit Power Supply	V_{LED}	4.5	5	5.5	[Volt]	(Ta=25℃)
LED Circuit Input current	I_{LED}		350	400	[mA]	(Ta=25℃)
LED Power Consumption	P_{LED}		1.75	2.2	[Watt]	(Ta=25℃) Note 1
LED PWM Frequency	L_{Freq}	---	200	1K	Hz	
LED Life-Time	N/A	10,000	-	-	Hour	(Ta=25℃) I_F=20 mA Note 2

Note 1: Calculator value for reference IF×VF =P

Note 2: The LED life-time define as the estimated time to 50% degradation of initial luminous.

Note 3: The LED driving condition is defined for LED module (24 LED)

Note 4: Define "LED Lifetime": brightness is decreased to 50% of the initial value. LED Lifetime is restricted under normal condition, ambient temperature = 25℃ and LED lightbar voltage = 10V.

Note 5: If it uses larger LED lightbar voltage more than 10V, it maybe decreases the LED lifetime

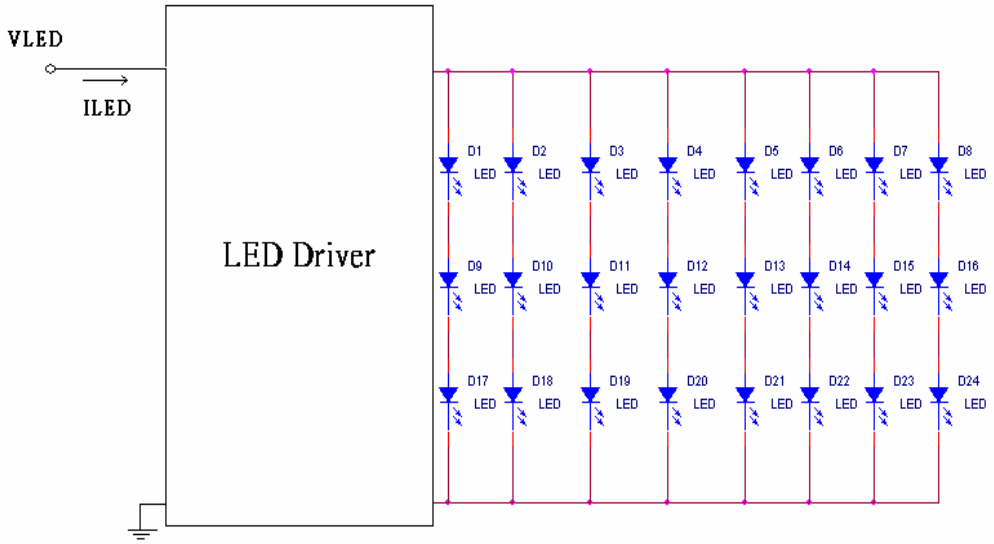

6. Signal Characteristic

6.1 Pixel Format Image

Following figure shows the relationship of the input signals and LCD pixel format.

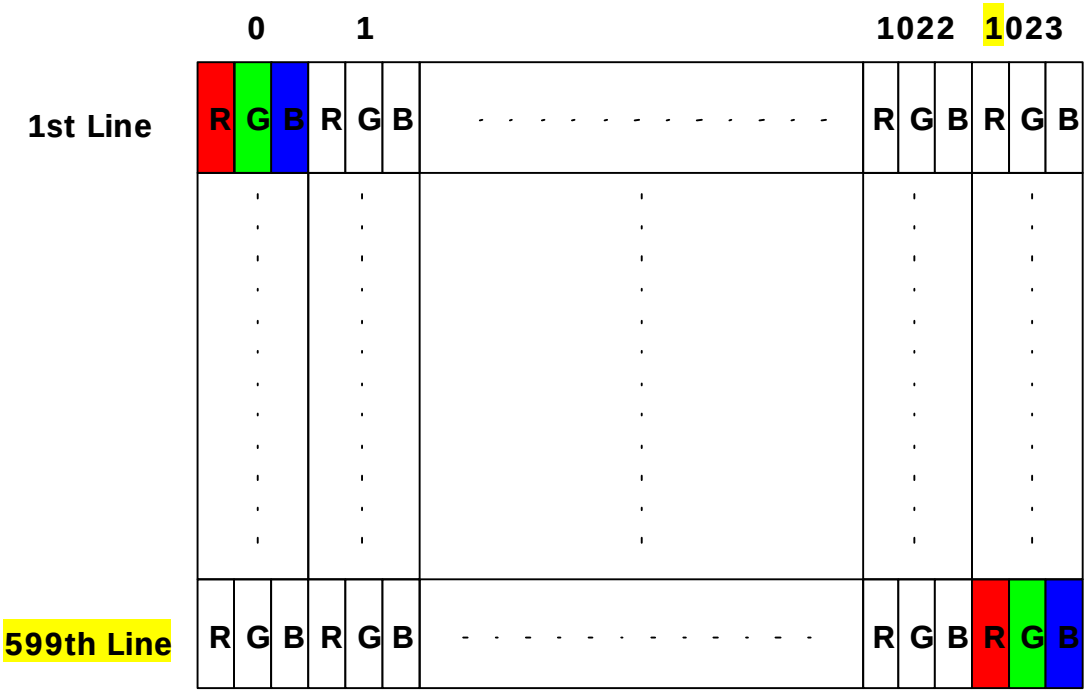

6.2 The input data format

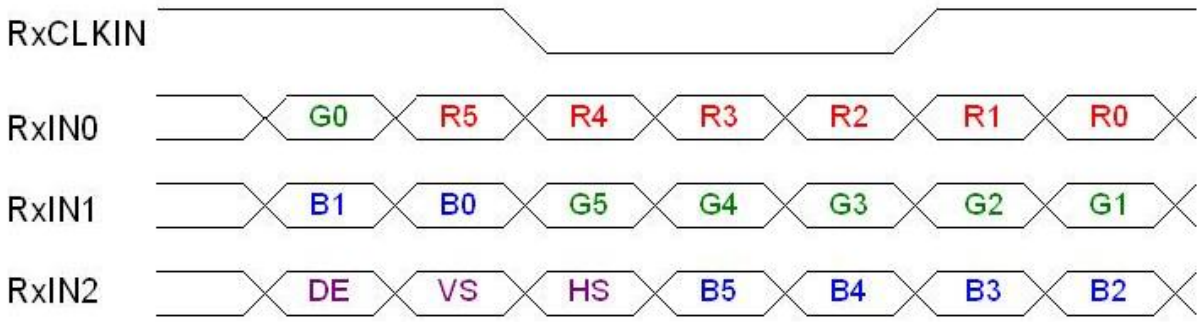

Signal Name	Description	
R5 R4 R3 R2 R1 R0	Red Data 5 (MSB) Red Data 4 Red Data 3 Red Data 2 Red Data 1 Red Data 0 (LSB) Red-pixel Data	Red-pixel Data Each red pixel's brightness data consists of these 6 bits pixel data.
G5 G4 G3 G2 G1 G0	Green Data 5 (MSB) Green Data 4 Green Data 3 Green Data 2 Green Data 1 Green Data 0 (LSB) Green-pixel Data	Green-pixel Data Each green pixel's brightness data consists of these 6 bits pixel data.
B5 B4 B3 B2 B1 B0	Blue Data 5 (MSB) Blue Data 4 Blue Data 3 Blue Data 2 Blue Data 1 Blue Data 0 (LSB) Blue-pixel Data	Blue-pixel Data Each blue pixel's brightness data consists of these 6 bits pixel data.
RxCLKIN	Data Clock	The typical frequency is 50.4 MHZ.The signal is used to strobe the pixel data and DE signals. All pixel data shall be valid at the falling edge when the DE signal is high.
DE	Display Timing	This signal is strobed at the falling edge of RxCLKIN. When the signal is high, the pixel data shall be valid to be displayed.
VS	Vertical Sync	The signal is synchronized to RxCLKIN .
HS	Horizontal Sync	The signal is synchronized to RxCLKIN .

Note: Output signals from any system shall be low or High-impedance state when VDD is off.

6.3 Signal Description/Pin Assignment

Pin no	Symbol	Description	Remark
1	GND	Ground	
2	VDD	+3.3V Power Supply	
3	VDD	+3.3V Power Supply	
4	V_{EDID}	+3.3V EDID Power	
5	NC	No Connection (Reserve for AUO test)	
6	CLK_{EDID}	EDID Clock Input	
7	$DATA_{EDID}$	EDID Data Input	
8	RxIN0-	LVDS differential data input(R0-R5, G0)	
9	RxIN0+	LVDS differential data input(R0-R5, G0)	
10	GND	Ground	
11	RxIN1-	LVDS differential data input(G1-G5, B0-B1)	
12	RxIN1+	LVDS differential data input(G1-G5, B0-B1)	
13	GND	Ground	
14	RxIN2-	LVDS differential data input(B2-B5, HS, VS, DE)	
15	RxIN2+	LVDS differential data input(B2-B5, HS, VS, DE)	
16	GND	Ground	
17	RxCLKIN-	LVDS differential clock input	
18	RxCLKIN+	LVDS differential clock input	
19	GND	Ground	
20	NC	No Connection (Reserve for AUO test)	
21	NC	No Connection (Reserve for AUO test)	
22	GND	Ground	
23	NC	No Connection (Reserve for AUO test)	
24	NC	No Connection (Reserve for AUO test)	
25	GND	Ground	
26	NC	No Connection (Reserve for AUO test)	
27	NC	No Connection (Reserve for AUO test)	
28	GND	Ground	
29	**VLED**	**LED Power Supply +5V**	
30	**VLED**	**LED Power Supply +5V**	
31	**VLED_GND**	**LED Ground**	
32	**VLED_GND**	**LED Ground**	
33	**VLED_GND**	**LED Ground**	
34	**NC**	**No Connection (Reserve for AUO test)**	
35	**NC**	**No Connection (Reserve for AUO test)**	
36	**NC**	**No Connection (Reserve for AUO test)**	
37	**NC**	**No Connection (Reserve for AUO test)**	
38	**S_PWMIN**	**System PWM signal Input**	**Note 1**
39	**LED_EN**	**ENB pin input (On: 3.3V or 5V, Off: 0V)**	**Note 2**
40	**NC**	**No Connection (Reserve for AUO test)**	

LVDS is a differential signal technology for LCD interface and high speed data transfer device.

Note 1: The PWM pin should not connect to ground, it should pull-high if not adjust brightness.

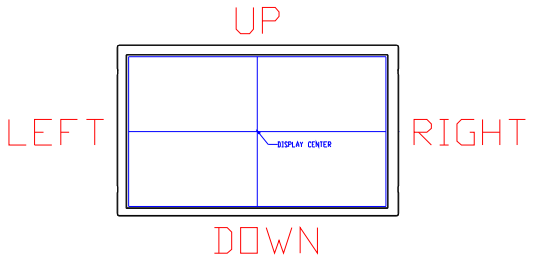

Note 2: Pin 39 connect to LED ENB pin. By the way, AUO pull high this pin via 100K resistor then connect to 5V. On (High): 3.3V or 5V, Off (Low): 0V

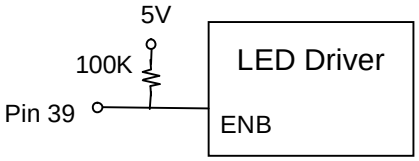

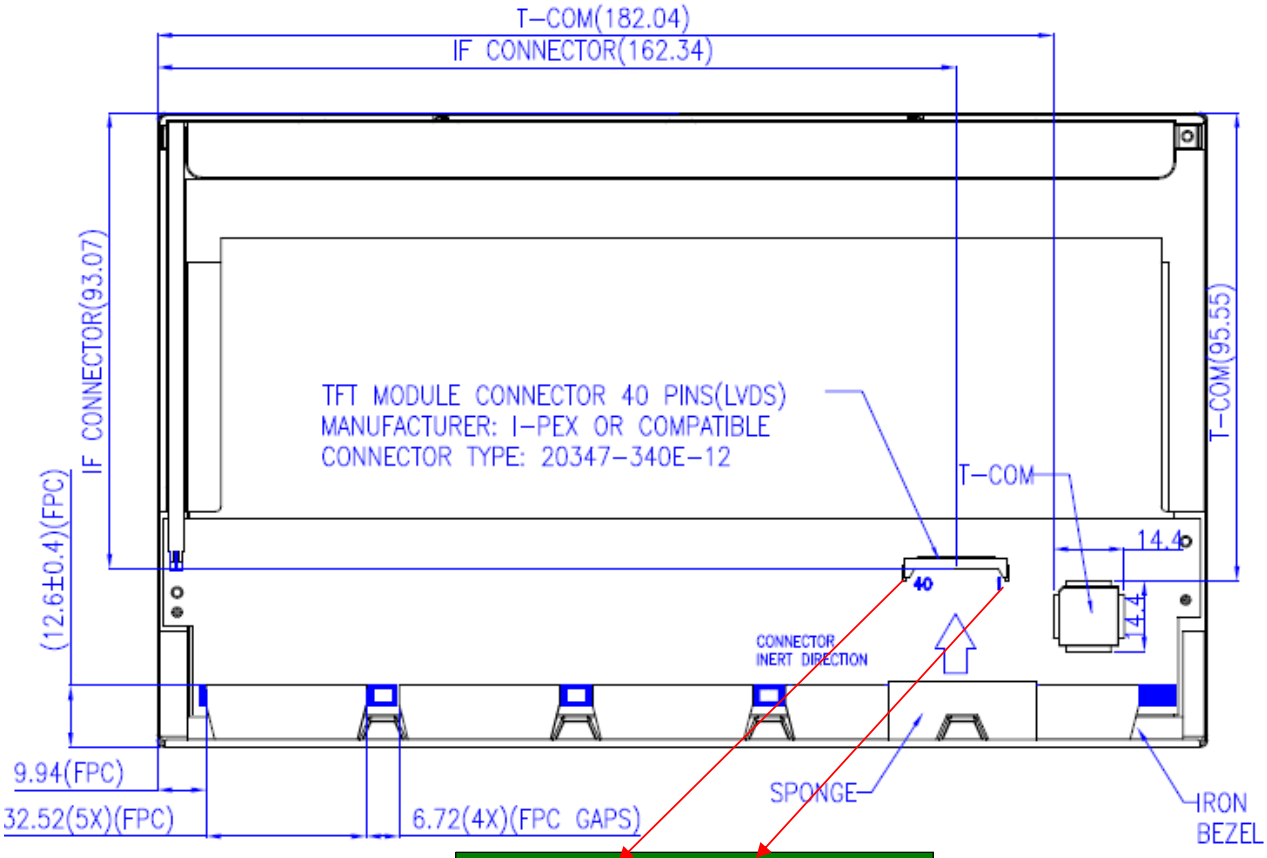

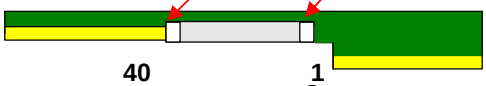

Connector: IPEX 20347-340E-12

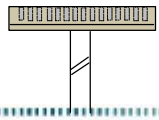

Note1: Start from right side

Note2: Input signals shall be low or High-impedance state when VDD is off.

internal circuit of LVDS inputs are as following.

The module uses a 100ohm resistor between positive and negative data lines of each receiver input

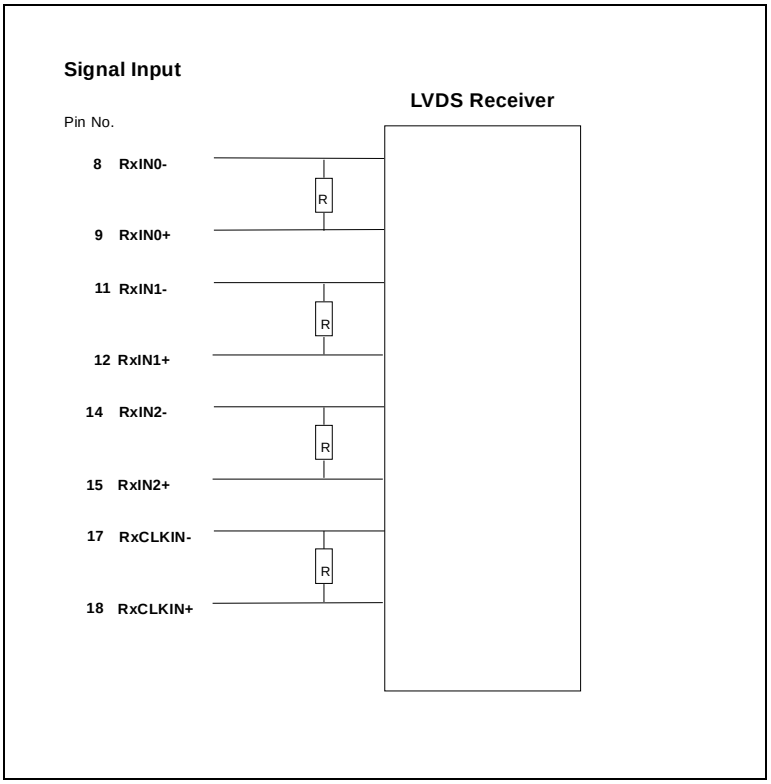

6.4 Interface Timing

6.4.1 Timing Characteristics

Basically, interface timings should match the 1024 x 600 /60Hz manufacturing guide line timing.

Parameter		Symbol	Min.	Typ.	Max.	Unit
Frame Rate		-	-	60	-	Hz
Clock frequency		1/ T_{Clock}	--	50.4	85	MHz
Vertical Section	Period	T_V	603	625	650	T_{Line}
	Active	T_{VD}	600	600	600	
	Blanking	T_{VB}	3	25	50	
Horizontal Section	Period	T_H	1303	1344	1534	T_{Clock}
	Active	T_{HD}	1024	1024	1024	
	Blanking	T_{HB}	22	320	510	

Note : DE mode only

6.4.2 Timing diagram

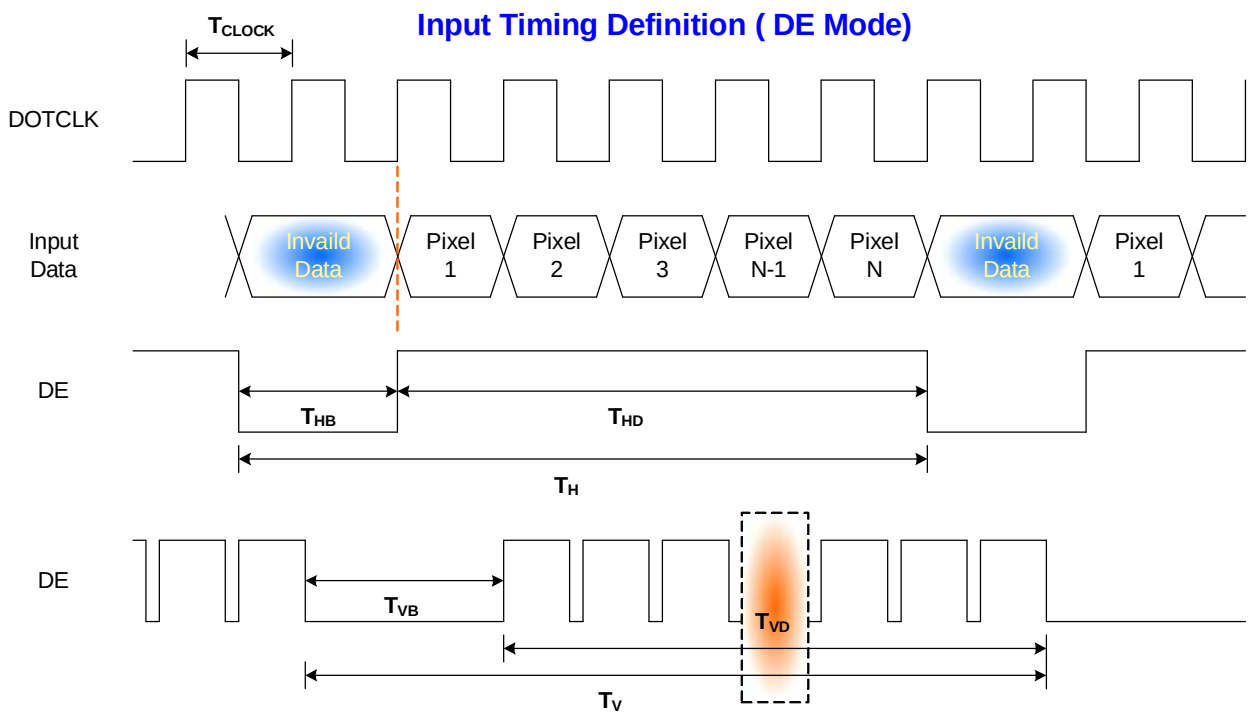

6.5 Power Sequence

6.5.1 Panel Power Sequence

VDD power and LED on/off sequence is as follows. Interface signals are also shown in the chart. Signals from any system shall be Hi-Z state or low level when VDD is off.

.

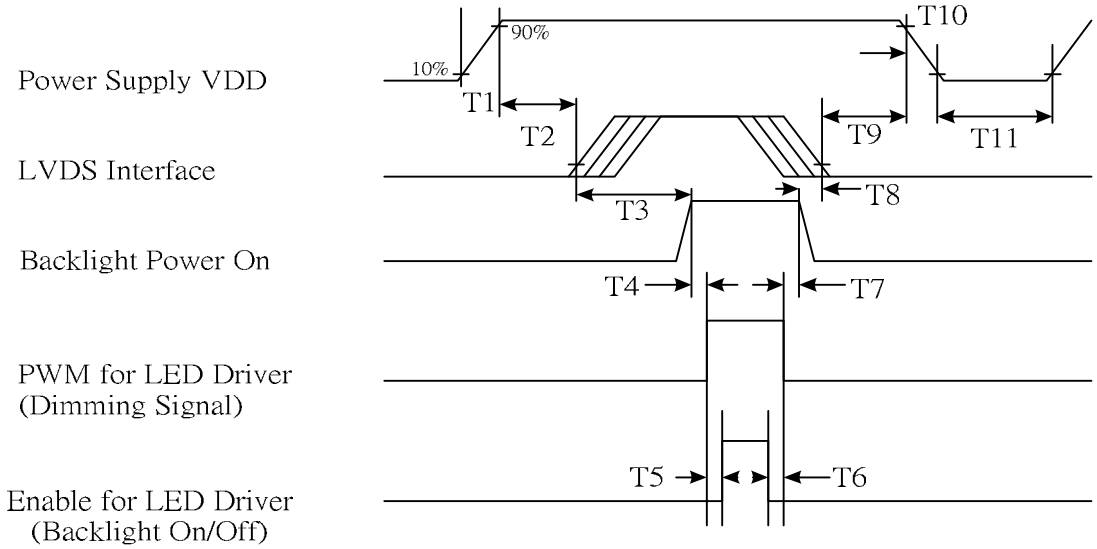

POWER Sequence Timing

Parameter	Value			Unit
	Min.	Typ.	Max.	
T1	0.5	-	10	[ms]
T2	30	40	50	[ms]
T3	200	-	-	[ms]
T4	10	-	-	[ms]
T5	10	-	-	[ms]
T6	0	-	-	[ms]
T7	10	-	-	[ms]
T8	100	-	-	[ms]
T9	0	16	50	[ms]
T10	-	-	10	[ms]
T11	1000	-	-	[ms]

7. Connector Description

Physical interface is described as for the connector on module.

These connectors are capable of accommodating the following signals and will be following components.

7.1 TFT LCD Module

Connector Name / Designation	**For Signal Connector**
Manufacturer	IPEX or compatible
Type / Part Number	IPEX 20347-340E-12 or compatible
Mating Housing/Part Number	IPEX 20347-340E-12 or compatible

8. 8. LED Driving Specification

8.1 Connector Description

It is a intergrative interface and comibe into LVDS connector. The type and mating refer to section 7.

8.2 Pin Assignment

Pin no	Symbol	Description	Remark
29	VLED	LED Power Supply +5V	
30	VLED	LED Power Supply +5V	
31	VLED_GND	LED Ground	
32	VLED_GND	LED Ground	
33	VLED_GND	LED Ground	
34	NC	No Connection (Reserve for AUO test)	
35	NC	No Connection (Reserve for AUO test)	
36	NC	No Connection (Reserve for AUO test)	
37	NC	No Connection (Reserve for AUO test)	
38	S_PWMIN	System PWM signal Input	
39	LED_EN	ENB pin input (On: 3.3V or 5V, Off: 0V)	
40	NC	No Connection (Reserve for AUO test)	

9. Reliability

Items	Required Condition	Note
Temperature Humidity Bias	Ta= 40℃, 90%RH, 240h	
High Temperature Operation	Ta= 50℃, Dry, 240h	
Low Temperature Operation	Ta= 0℃, 240h	
High Temperature Storage	Ta= 60℃, 240h	
Low Temperature Storage	Ta= -20℃, 240h	
Thermal Shock Test	Ta=-20℃to 60℃, Duration at 30 min, 100 cycles	
ESD	Contact : ±8 KV Air : ±15 KV	Note 1

Note1: According to EN 61000-4-2 , ESD class B: Some performance degradation allowed. No data lost

. Self-recoverable. No hardware failures.

Remark: MTBF (Excluding the LED): 30,000 hours with a confidence level 90%

10. Mechanical Characteristics

10.1 LCM Outline Dimension

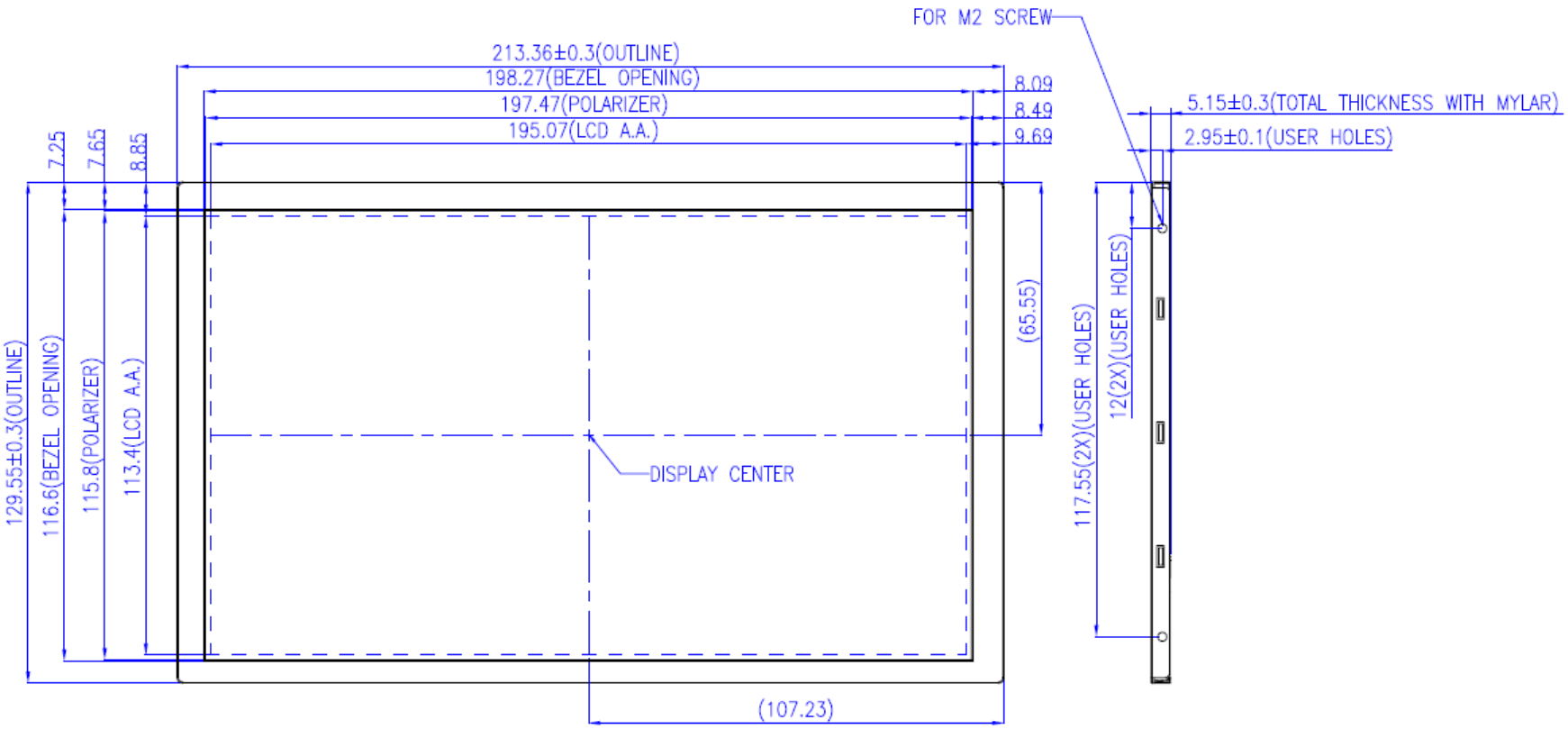

NOTES:

1.GENERAL TOLERANCE IS ±0.3 mm
2.I/F CONNECTOR TO BE IPX 20347-340E-12
3.ALLOWED DEPTH OF USER HOLE FOR SCREW IS 2.0mm Max.

Note: In order to avoid IC damage, it is not allowed to have any component overlapping on those areas.

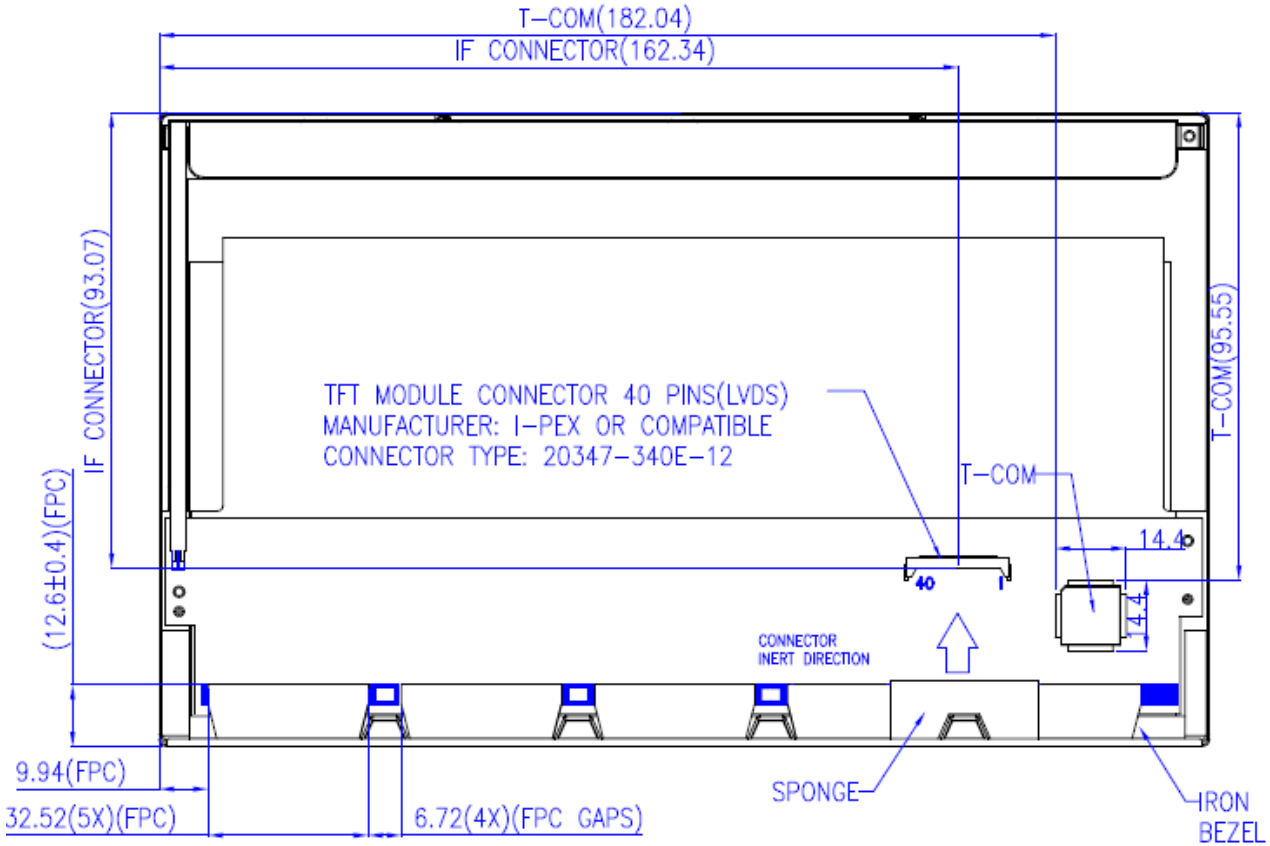
T-COM(182.04)
IF CONNECTOR(162.34)
IF CONNECTOR(93.07)
T-COM(95.55)
TFT MODULE CONNECTOR 40 PINS(LVDS)
MANUFACTURER: I-PEX OR COMPATIBLE
CONNECTOR TYPE: 20347-340E-12
T-COM
14.4
14.4
40
1
CONNECTOR
INERT DIRECTION
(12.6±0.4)(FPC)
9.94(FPC)
32.52(5X)(FPC)
6.72(4X)(FPC GAPS)
SPONGE
IRON
BEZEL

10.2 Screw Hole Depth and Center Position

Screw hole minimum depth, from side surface =2.5 mm (See drawing)

Screw hole center location, from front surface = 2.95 ± 0.1mm (See drawing)

Suggestions: Customers' Screw maximum length = 2.0 mm (See drawing)

Screw Torque: Maximum2.5 kgf-cm

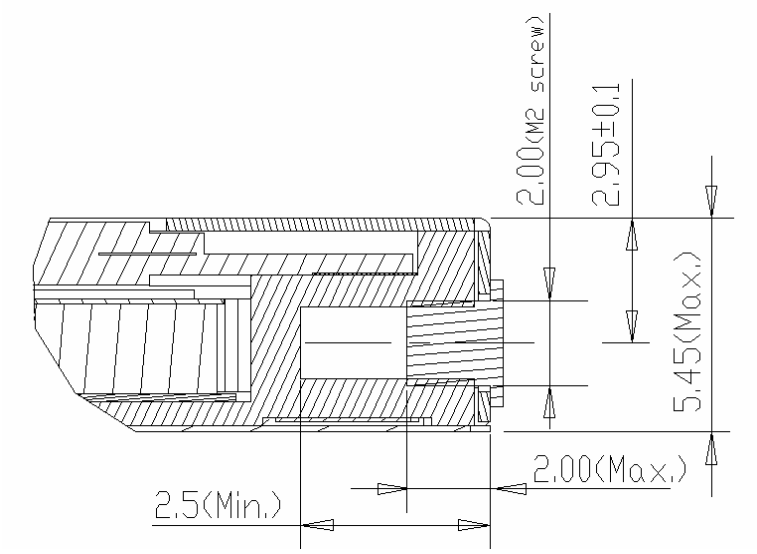

11. Shipping and Package

11.1 Shipping Label Format

11.2 Carton package

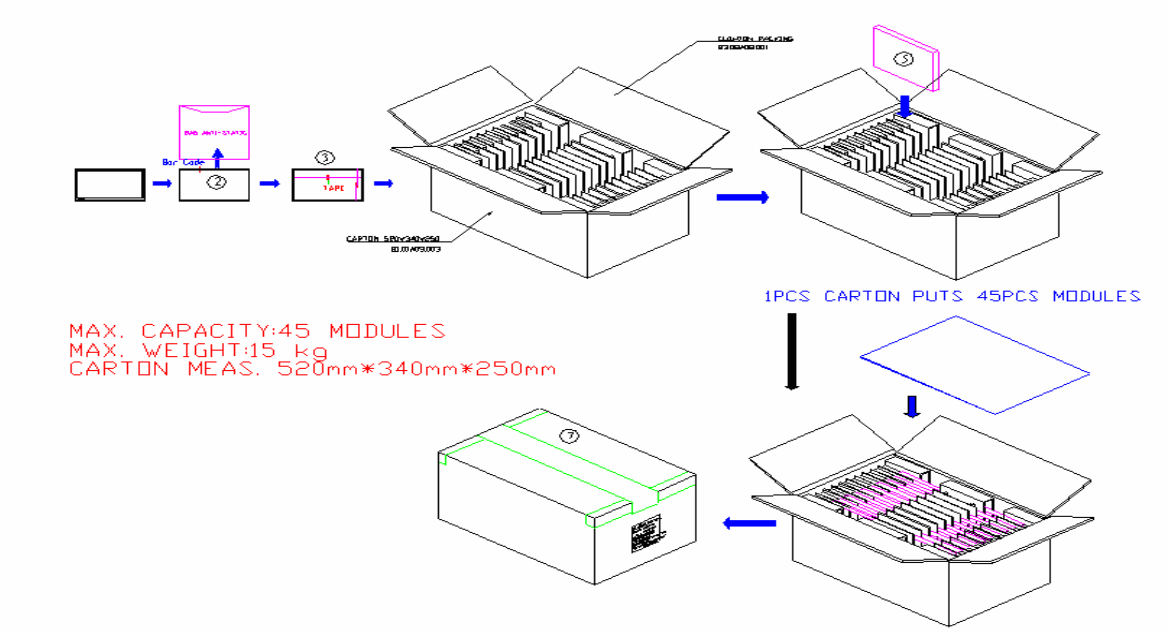

11.3 Shipping package of palletizing sequence

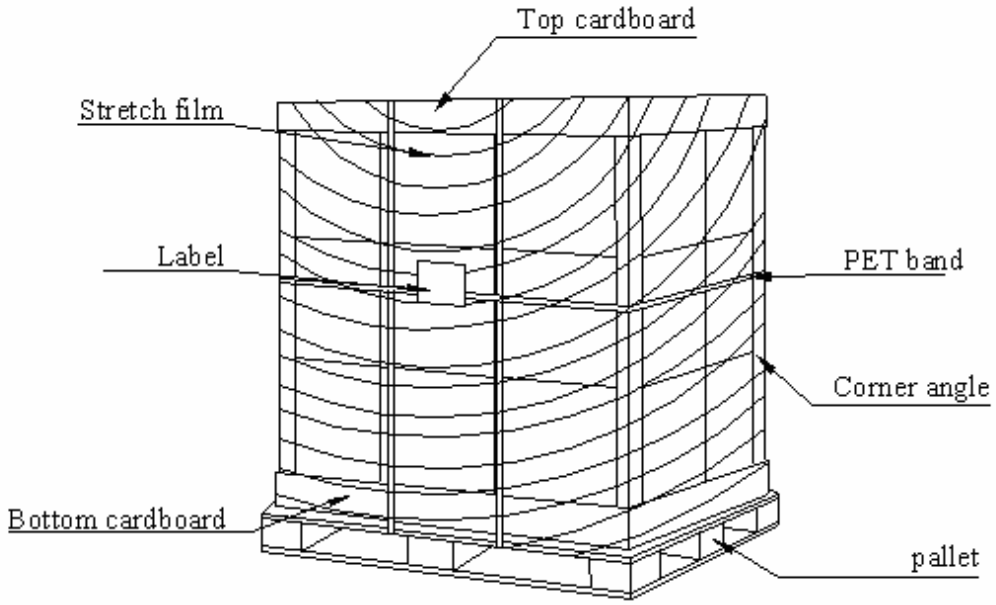

12. Appendix: EDID description

B089AW01 V0 EDID Code

Address	FUNCTION	Value	Value	Value	Note
HEX		HEX	BIN	DEC	
00	Header	00	00000000	0	
01		FF	11111111	255	
02		FF	11111111	255	
03		FF	11111111	255	
04		FF	11111111	255	
05		FF	11111111	255	
06		FF	11111111	255	
07		00	00000000	0	
08	EISA Manuf. Code LSB	06	00000110	6	
09	Compressed ASCII	AF	10101111	175	
0A	Product Code	C2	11000010	194	
0B	hex, LSB first	10	00010000	16	
0C	32-bit ser #	00	00000000	0	
0D		00	00000000	0	
0E		00	00000000	0	
0F		00	00000000	0	
10	Week of manufacture	01	00000001	1	
11	Year of manufacture	12	00010010	18	
12	EDID Structure Ver.	01	00000001	1	
13	EDID revision #	03	00000011	3	
14	**Video input def.** *(digital I/P, non-TMDS, CRGB)*	80	10000000	128	
15	**Max H image size** *(rounded to cm)*	14	00010100	20	
16	**Max V image size** *(rounded to cm)*	0B	00001011	11	
17	**Display Gamma** *(=(gamma*100)-100)*	78	01111000	120	
18	**Feature support** *(no DPMS, Active OFF, RGB, tmg Blk#1)*	0A	00001010	10	
19	Red/green low bits **(Lower 2:2:2:2 bits)**	FA	11111010	250	
1A	Blue/white low bits **(Lower 2:2:2:2 bits)**	56	01010110	86	
1B	Red x **(Upper 8 bits)**	92	10010010	146	
1C	Red y/ highER 8 bits	56	01010110	86	
1D	Green x	54	01010100	84	
1E	Green y	98	10011000	152	
1F	Blue x	24	00100100	36	
20	Blue y	1A	00011010	26	
21	White x	4F	01001111	79	
22	White y	54	01010100	84	
23	Established timing 1	00	00000000	0	
24	Established timing 2	00	00000000	0	
25	Established timing 3	00	00000000	0	
26	Standard timing #1	01	00000001	1	
27		01	00000001	1	
28	Standard timing #2	01	00000001	1	

29		01	00000001	1	
2A	Standard timing #3	01	00000001	1	
2B		01	00000001	1	
2C	Standard timing #4	01	00000001	1	
2D		01	00000001	1	
2E	Standard timing #5	01	00000001	1	
2F		01	00000001	1	
30	Standard timing #6	01	00000001	1	
31		01	00000001	1	
32	Standard timing #7	01	00000001	1	
33		01	00000001	1	
34	Standard timing #8	01	00000001	1	
35		01	00000001	1	
36	Pixel Clock/10000 LSB	B0	10110000	176	
37	Pixel Clock/10000 USB	13	00010011	19	
38	Horz active **Lower 8bits**	00	00000000	0	
39	Horz blanking **Lower 8bits**	40	01000000	64	
3A	HorzAct:HorzBlnk **Upper 4:4 bits**	41	01000001	65	
3B	Vertical Active **Lower 8bits**	58	01011000	88	
3C	Vertical Blanking **Lower 8bits**	19	00011001	25	
3D	Vert Act : Vertical Blanking **(upper 4:4 bit)**	20	00100000	32	
3E	HorzSync. Offset	18	00011000	24	
3F	HorzSync.Width	88	10001000	136	
40	VertSync.Offset : VertSync.Width	31	00110001	49	
41	Horz&Vert Sync Offset/Width **Upper 2bits**	00	00000000	0	
42	Horizontal Image Size **Lower 8bits**	C3	11000011	195	
43	Vertical Image Size **Lower 8bits**	71	01110001	113	
44	Horizontal & Vertical Image Size **(upper 4:4 bits)**	00	00000000	0	
45	Horizontal Border *(zero for internal LCD)*	00	00000000	0	
46	Vertical Border *(zero for internal LCD)*	00	00000000	0	
47	Signal *(non-intr, norm, no stero, sep sync, neg pol)*	18	00011000	24	
48	Detailed timing/monitor	00	00000000	0	
49	descriptor #2	00	00000000	0	
4A		00	00000000	0	
4B		0F	00001111	15	
4C		00	00000000	0	
4D		00	00000000	0	
4E		00	00000000	0	
4F		00	00000000	0	
50		00	00000000	0	
51		00	00000000	0	
52		00	00000000	0	
53		00	00000000	0	
54		00	00000000	0	
55		00	00000000	0	
56		00	00000000	0	
57		00	00000000	0	

58		00	00000000	0	
59		20	00100000	32	
5A	Detailed timing/monitor	00	00000000	0	
5B	descriptor #3	00	00000000	0	
5C		00	00000000	0	
5D		FE	11111110	254	
5E		00	00000000	0	
5F	Manufacture	41	01000001	65	A
60	Manufacture	55	01010101	85	U
61	Manufacture	4F	01001111	79	O
62		0A	00001010	10	
63		20	00100000	32	
64		20	00100000	32	
65		20	00100000	32	
66		20	00100000	32	
67		20	00100000	32	
68		20	00100000	32	
69		20	00100000	32	
6A		20	00100000	32	
6B		20	00100000	32	
6C	Detailed timing/monitor	00	00000000	0	
6D	descriptor #4	00	00000000	0	
6E		00	00000000	0	
6F		FE	11111110	254	
70		00	00000000	0	
71	Manufacture P/N	42	01000010	66	B
72	Manufacture P/N	30	00110000	48	0
73	Manufacture P/N	38	00111000	56	8
74	Manufacture P/N	39	00111001	57	9
75	Manufacture P/N	41	01000001	65	A
76	Manufacture P/N	57	01010111	87	W
77	Manufacture P/N	30	00110000	48	0
78	Manufacture P/N	31	00110001	49	1
79	Manufacture P/N	20	00100000	32	
7A	Manufacture P/N	56	01010110	86	V
7B	Manufacture P/N	30	00110000	48	0
7C		20	00100000	32	
7D		0A	00001010	10	
7E	Extension Flag	00	00000000	0	
7F	Checksum	5A	01011010	90	