# SmarterGlass

state-of-the-art display solutions

www.smarterglass.com
978 997 4104
sales@smarterglass.com

**( V ) Preliminary Specifications**
**(  ) Final Specifications**

| | |
|---|---|
| **Module** | **13.3”(13.25”) FHD 16:9 Color TFT-LCD with LED Backlight design** |
| **Model Name** | B133XW01 V5 (H/W:0A) |
| **Note ( )** | ***LED Backlight with driving circuit design*** |

| | |
|---|---|
| **Customer** | **Date** |
| **Checked & Approved by** | **Date** |
| Note: This Specification is subject to change without notice. | |

| | |
|---|---|
| **Approved by** | **Date** |
| Howard LEE | 11/16/2009 |
| **Prepared by** | |
| Buffy Chen | 11/16/2009 |
| **NBBU Marketing Division AU Optronics corporation** | |

# Contents

**1. Handling Precautions ..... 4**
**2. General Description ..... 5**
2.1 General Specification ..... 5
2.2 Optical Characteristics ..... 6
**3. Functional Block Diagram ..... 11**
**4. Absolute Maximum Ratings ..... 12**
4.1 Absolute Ratings of TFT LCD Module ..... 12
4.2 Absolute Ratings of Environment ..... 12
**5. Electrical Characteristics ..... 13**
5.1 TFT LCD Module ..... 13
5.2 Backlight Unit ..... 15
**6. Signal Interface Characteristic ..... 16**
6.1 Pixel Format Image ..... 16
6.2 The Input Data Format ..... 17
6.3 Integration Interface Requirement ..... 18
6.4 Interface Timing ..... 20
**7. Panel Reliability Test ..... 22**
7.1 Vibration Test ..... 22
7.2 Shock Test ..... 22
7.3 Reliability Test ..... 22
**8. Mechanical Characteristics ..... 23**
8.1 LCM Outline Dimension ..... 23
**9. Shipping and Package ..... 25**
9.1 Shipping Label Format ..... 25
9.2 Carton Package ..... 26
9.3 Shipping Package of Palletizing Sequence ..... 26
**10. Appendix: EDID Description ..... 27**

# Record of Revision

| Version and Date | Page | Old description | New Description | Remark |
|---|---|---|---|---|
| 0.1 2009/11/16 | All | First Edition for Customer | | |
| | | | | |
| | | | | |
| | | | | |
| | | | | |
| | | | | |
| | | | | |
| | | | | |
| | | | | |
| | | | | |
| | | | | |
| | | | | |

## 1. Handling Precautions

1) Since front polarizer is easily damaged, pay attention not to scratch it.
2) Be sure to turn off power supply when inserting or disconnecting from input connector.
3) Wipe off water drop immediately. Long contact with water may cause discoloration or spots.
4) When the panel surface is soiled, wipe it with absorbent cotton or other soft cloth.
5) Since the panel is made of glass, it may break or crack if dropped or bumped on hard surface.
6) Since CMOS LSI is used in this module, take care of static electricity and insure human earth when handling.
7) Do not open nor modify the Module Assembly.
8) Do not press the reflector sheet at the back of the module to any directions.
9) At the insertion or removal of the Signal Interface Connector, be sure not to rotate nor tilt the Interface Connector of the TFT Module.
11) After installation of the TFT Module into an enclosure (Notebook PC Bezel, for example), do not twist nor bend the TFT Module even momentary. At designing the enclosure, it should be taken into consideration that no bending/twisting forces are applied to the TFT Module from outside. Otherwise the TFT Module may be damaged.
12) Small amount of materials having no flammability grade is used in the LCD module. The LCD module should be supplied by power complied with requirements of Limited Power Source (IEC60950 or UL1950), or be applied exemption.
13) Disconnecting power supply before handling LCD modules, it can prevent electric shock, DO NOT TOUCH the electrode parts, cables, connectors and LED circuit part of TFT module that a LED light bar build in as a light source of back light unit. It can prevent electrostic breakdown.

## 2. General Description

B133XW01 V5 is a Color Active Matrix Liquid Crystal Display composed of a TFT LCD panel, a driver circuit, and LED backlight system. The screen format is intended to support the 16:9 HD, 1366(H) x768(V) screen and 262k colors (RGB 6-bits data driver) with LED backlight driving circuit. All input signals are LVDS interface compatible.

B133XW01 V5 is designed for a display unit of notebook style personal computer and industrial machine.

### 2.1 General Specification

The following items are characteristics summary on the table at 25 ℃ condition:

| Items | Unit | Specifications | | | |
|---|---|---|---|---|---|
| Screen Diagonal | [mm] | 13.3W”(13.25) | | | |
| Active Area | [mm] | 293.42 x 164.97 | | | |
| Pixels H x V | | 1366 x 3(RGB) x 768 | | | |
| Pixel Pitch | [mm] | 0.2148 x 0.2148 | | | |
| Pixel Format | | R.G.B. Vertical Stripe | | | |
| Display Mode | | Normally White | | | |
| White Luminance ($I_{LED}$=20mA)<br>**(Note: ILED is LED current)** | [cd/m$^2$] | 200 typ. (5 points average)<br>170 min. (5 points average) | | | |
| Luminance Uniformity | | 1.25 max. (5 points) | | | |
| Contrast Ratio | | 500 typ | | | |
| Response Time | [ms] | 8 typ / 16 Max | | | |
| Nominal Input Voltage VDD | [Volt] | +3.3 typ. | | | |
| Power Consumption | [Watt] | 5.8 max. (Include Logic and Blu power) | | | |
| Weight | [Grams] | 300 max. | | | |
| Physical Size<br>**Include bracket** | [mm] | | Min. | Typ. | Max. |
| | | Length | --- | --- | 314.6 |
| | | Width | --- | --- | 189.3 |
| | | Thickness | --- | --- | 3.6 |
| Electrical Interface | | 1 channel LVDS | | | |
| Glass Thickness | [mm] | 0.5 | | | |
| Surface Treatment | | Glare, Hardness 3H | | | |
| Support Color | | 262K colors ( RGB 6-bit ) | | | |

| | | |
|---|---|---|
| Temperature Range<br>Operating<br>Storage (Non-Operating) | <br>[°C]<br>[°C] | <br>0 to +50<br>-20 to +60 |
| RoHS Compliance | | RoHS Compliance |

## 2.2 Optical Characteristics

The optical characteristics are measured under stable conditions at 25℃ (Room Temperature) :

| Item | | Symbol | Conditions | Min. | Typ. | Max. | Unit | Note |
|---|---|---|---|---|---|---|---|---|
| White Luminance $I_{LED}$=20mA | | | 5 points average | 170 | 200 | --- | cd/m² | 1, 4, 5. |
| Viewing Angle | | $\theta_R$<br>$\theta_L$ | Horizontal (Right)<br>CR = 10 (Left) | ---<br>--- | 45<br>45 | ---<br>--- | degree | 4, 9 |
| | | $\phi_H$<br>$\phi_L$ | Vertical (Upper)<br>CR = 10 (Lower) | ---<br>--- | 15<br>30 | ---<br>--- | | |
| Luminance Uniformity | | $\delta_{5P}$ | 5 Points | --- | --- | 1.25 | | 1, 3, 4 |
| Contrast Ratio | | CR | | 400 | 500 | --- | | 4, 6 |
| Cross talk | | % | | --- | --- | 4 | | 4, 7 |
| Response Time | | $T_{RT}$ | Rising + Falling | --- | 8 | 16 | msec | 4, 8 |
| Color / Chromaticity Coodinates | Red | Rx | CIE 1931 | | TBD | | --- | 4 |
| | | Ry | | | TBD | | | |
| | Green | Gx | | | TBD | | | |
| | | Gy | | | TBD | | | |
| | Blue | Bx | | | TBD | | | |
| | | By | | | TBD | | | |
| | White | Wx | | 0.273 | 0.313 | 0.353 | | |
| | | Wy | | 0.289 | 0.329 | 0.359 | | |
| NTSC | | % | | ---- | 72 | ---- | | |

**Note 1**: 5 points position (Ref: Active area)

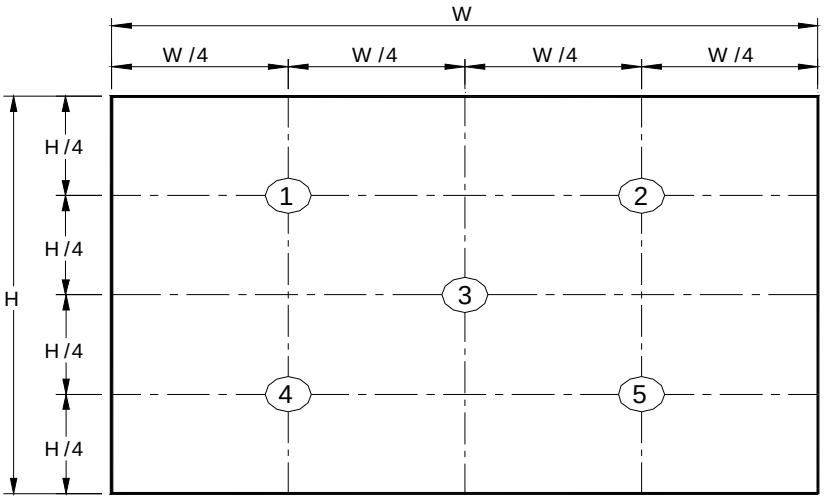


**Note 2**: 13 points position (Ref: Active area)

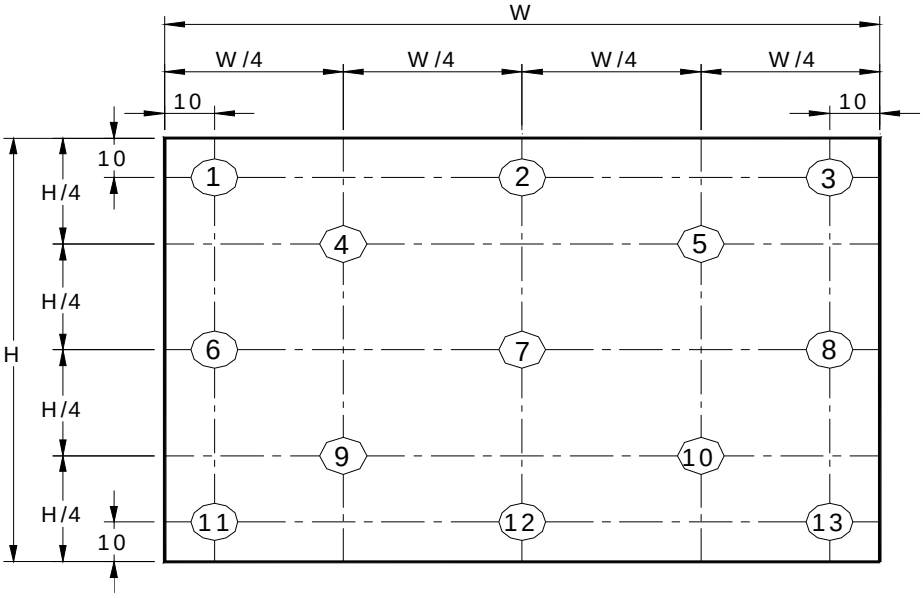


**Note 3**: The luminance uniformity of 5 or13 points is defined by dividing the maximum luminance values by the minimum test point luminance

$$\delta_{W5} = \frac{\text{Maximum Brightness of five points}}{\text{Minimum Brightness of five points}}$$

$$\delta_{W13} = \frac{\text{Maximum Brightness of thirteen points}}{\text{Minimum Brightness of thirteen points}}$$

**Note 4**: Measurement method

The LCD module should be stabilized at given temperature for 30 minutes to avoid abrupt temperature change during measuring. In order to stabilize the luminance, the measurement should be executed after

lighting Backlight for 30 minutes in a stable, windless and dark room, and it should be measured in the center of screen.

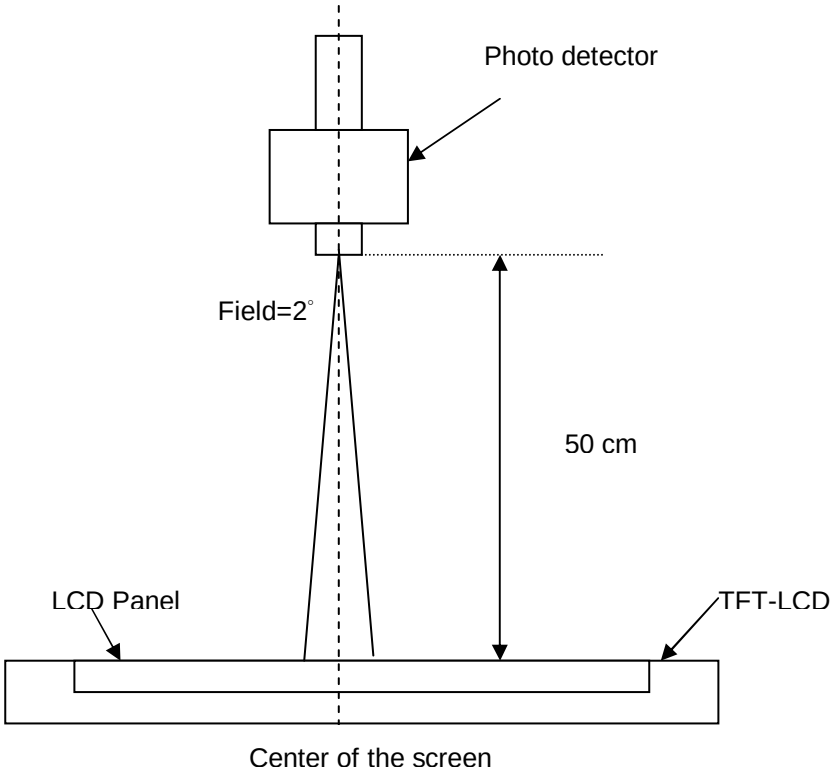


**Note 5**： Definition of Average Luminance of White ($Y_L$):

Measure the luminance of gray level 63 at 5 points，$Y_L$ = [L (1)+ L (2)+ L (3)+ L (4)+ L (5)] / 5

L (x) is corresponding to the luminance of the point X at Figure in Note (1).

**Note 6**： Definition of contrast ratio:

Contrast ratio is calculated with the following formula.

$$\text{Contrast ratio (CR)} = \frac{\text{Brightness on the “White” state}}{\text{Brightness on the “Black” state}}$$

**Note 7**： Definition of Cross Talk (CT)

$CT = | Y_B – Y_A | / Y_A \times 100$ (%)

Where

$Y_A$ = Luminance of measured location without gray level 0 pattern (cd/m2)

$Y_B$ = Luminance of measured location with gray level 0 pattern (cd/m2)

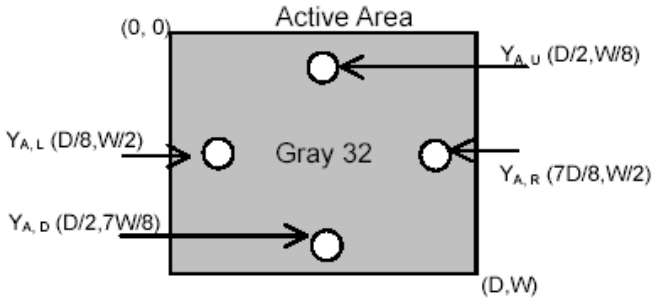


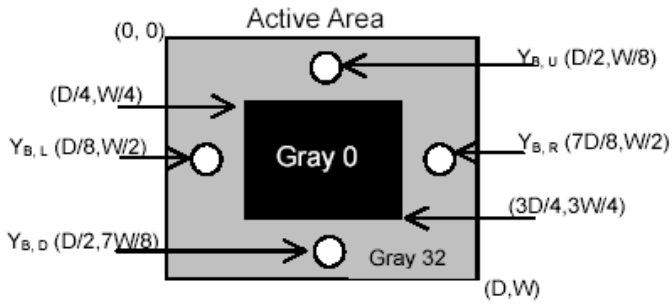


**Note 8**: Definition of response time:

The output signals of BM-7 or equivalent are measured when the input signals are changed from “Black” to “White” (falling time) and from “White” to “Black” (rising time), respectively. The response time interval between the 10% and 90% of amplitudes. Refer to figure as below.

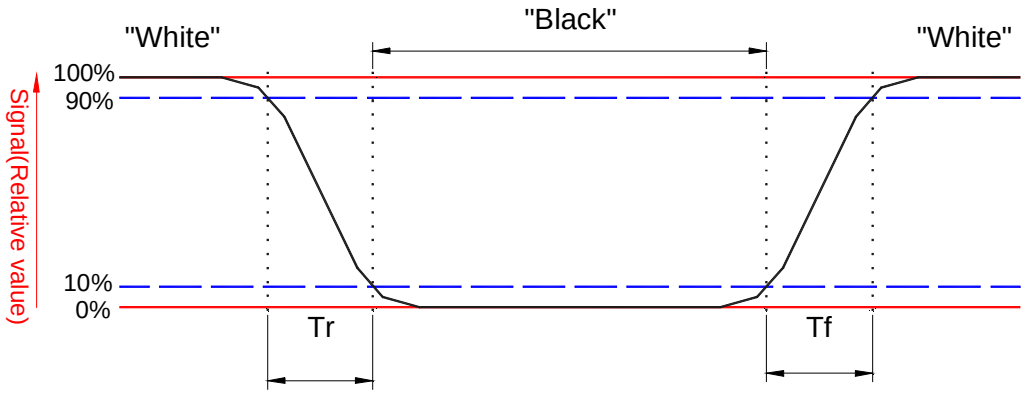

**Note 9**. Definition of viewing angle

Viewing angle is the measurement of contrast ratio ≧10, at the screen center, over a 180° horizontal and 180° vertical range (off-normal viewing angles). The 180° viewing angle range is broken down as follows; 90° (θ) horizontal left and right and 90° (Φ) vertical, high (up) and low (down). The measurement direction is typically perpendicular to the display surface with the screen rotated about its center to develop the desired measurement viewing angle.

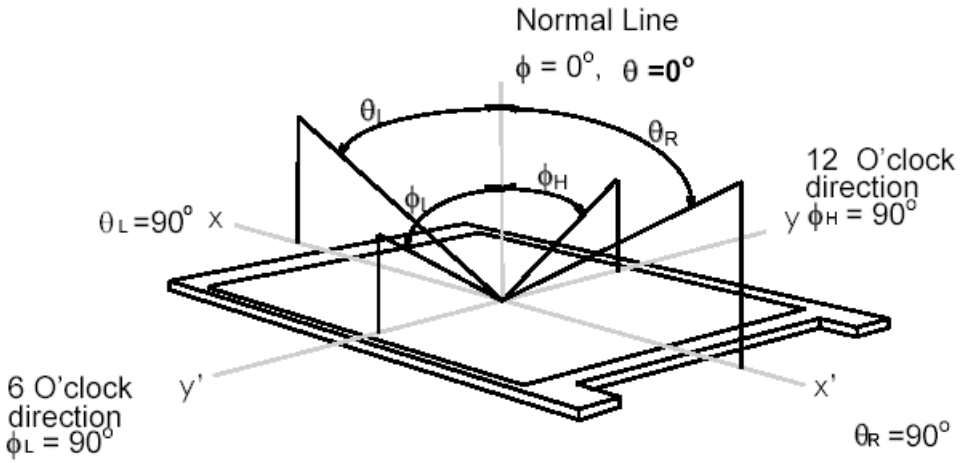

## 3. Functional Block Diagram

The following diagram shows the functional block of the 13.3 inches wide Color TFT/LCD 40 Pin one channel Module

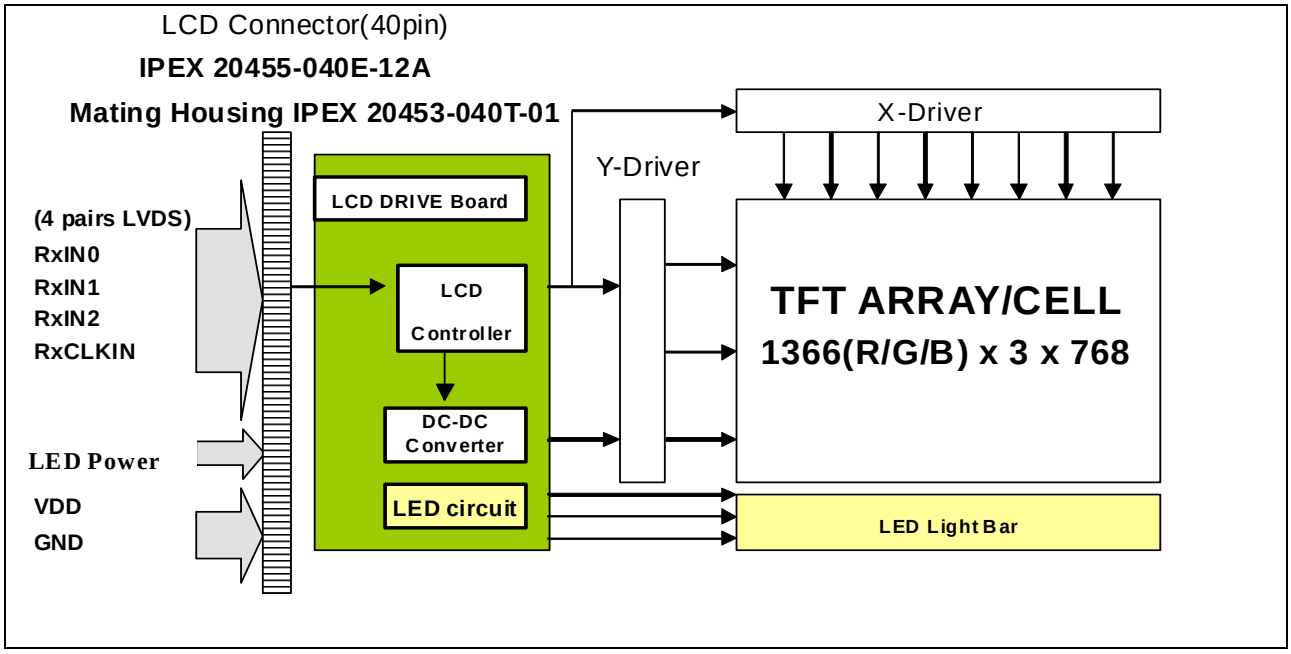

# 4. Absolute Maximum Ratings

An absolute maximum rating of the module is as following:

## 4.1 Absolute Ratings of TFT LCD Module

| Item | Symbol | Min | Max | Unit | Conditions |
|---|---|---|---|---|---|
| Logic/LCD Drive | Vin | -0.3 | +4.0 | [Volt] | Note 1,2 |

## 4.2 Absolute Ratings of Environment

| Item | Symbol | Min | Max | Unit | Conditions |
|---|---|---|---|---|---|
| Operating Temperature | TOP | 0 | +50 | [°C] | Note 4 |
| Operation Humidity | HOP | 5 | 95 | [%RH] | Note 4 |
| Storage Temperature | TST | -20 | +60 | [°C] | Note 4 |
| Storage Humidity | HST | 5 | 95 | [%RH] | Note 4 |

Note 1: At Ta (25℃ )

Note 2: Permanent damage to the device may occur if exceed maximum values

Note 3: LED specification refer to section 5.2

Note 4: For quality performance, please refer to AUO IIS (Incoming Inspection Standard).

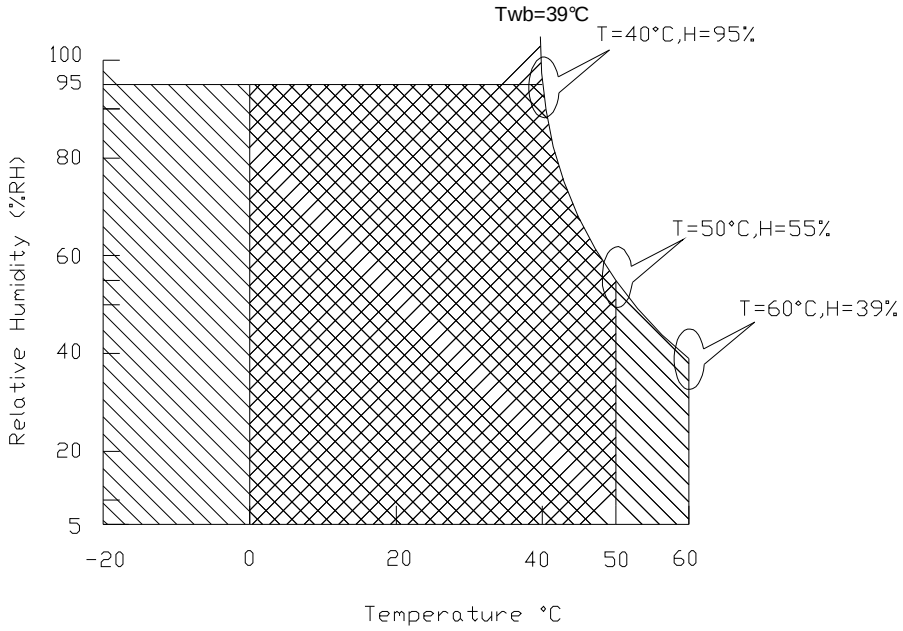


Operating Range Storage Range +

# 5. Electrical Characteristics

## 5.1 TFT LCD Module

### 5.1.1 Power Specification

Input power specifications are as follows;

The power specification are measured under 25℃ and frame frenquency under 60Hz

| Symble | Parameter | Min | Typ | Max | Units | Note |
|---|---|---|---|---|---|---|
| VDD | Logic/LCD Drive Voltage | 3.0 | 3.3 | 3.6 | [Volt] | |
| PDD | VDD Power | - | - | 1.0 | [Watt] | Note 1 |
| IDD | IDD Current | - | - | 300 | [mA] | Note 1 |
| IRush | Inrush Current | - | - | 2000 | [mA] | Note 2 |
| VDDrp | Allowable Logic/LCD Drive Ripple Voltage | - | - | 100 | [mV] p-p | |

Note 1 : Maximum Measurement Condition：Black Pattern at 3.3V driving voltage. ($P_{max}=V_{3.3} \times I_{black}$)

Note 2：Measure Condition

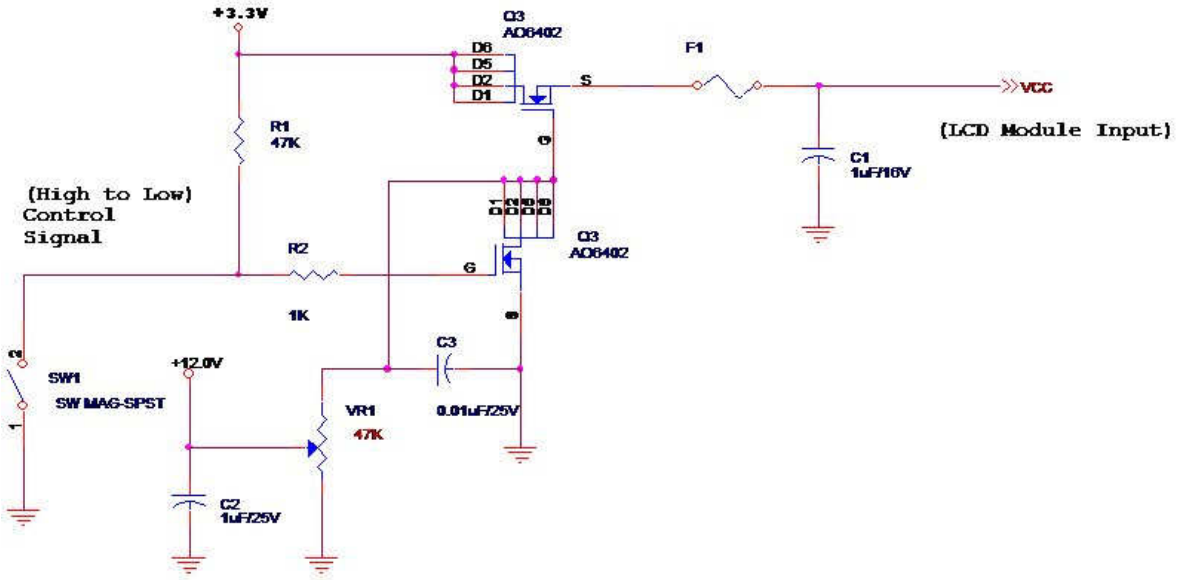


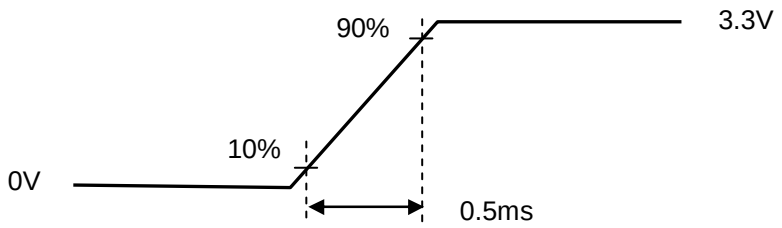


**Vin rising time**

### 5.1.2 Signal Electrical Characteristics

Input signals shall be low or High-impedance state when VDD is off.

Signal electrical characteristics are as follows;

| Parameter | Condition | Min | Max | Unit |
|---|---|---|---|---|
| $V_{TH}$ | Differential Input High Threshold (Vcm=+1.2V) | --- | 100 | [mV] |
| $V_{TL}$ | Differential Input Low Threshold (Vcm=+1.2V) | -100 | --- | [mV] |
| $\|V_{ID}\|$ | Differential Input Voltage | 100 | 600 | [mV] |
| $V_{CM}$ | Differential Input Common Mode Voltage | 1.125 | 1.375 | [V] |

Note: LVDS Signal Waveform

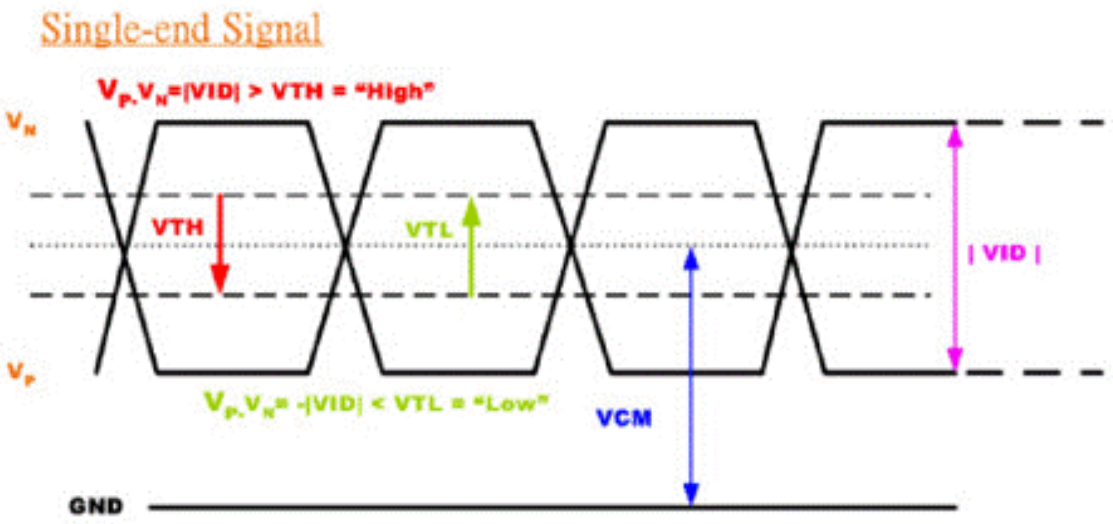

## 5.2 Backlight Unit

### 5.2.1 LED characteristics

| Parameter | Symbol | Min | Typ | Max | Units | Condition |
|---|---|---|---|---|---|---|
| Backlight Power Consumption | PLED | - | - | 4.8 | [Watt] | (Ta=25℃), Note 1 Vin =12V |
| LED Life-Time | N/A | 10,000 | - | - | Hour | (Ta=25℃), Note 2 $I_F$=20 mA |

**Note 1:** Calculator value for reference $P_{LED}$ = $V_F$ (Normal Distribution) * $I_F$ (Normal Distribution) / Efficiency

**Note 2:** The LED life-time define as the estimated time to 50% degradation of initial luminous.

### 5.2.2 Backlight input signal characteristics

| Parameter | Symbol | Min | Typ | Max | Units | Remark |
|---|---|---|---|---|---|---|
| LED Power Supply | VLED | 6.0 | 12.0 | 21.0 | [Volt] | Define as Connector Interface (Ta=25℃) |
| LED Enable Input High Level | VLED_EN | 2.5 | - | 5.5 | [Volt] | |
| LED Enable Input Low Level | | - | - | 0.8 | [Volt] | |
| PWM Logic Input High Level | VPWM_EN | 2.5 | - | 5.5 | [Volt] | |
| PWM Logic Input Low Level | | - | - | 0.8 | [Volt] | |
| PWM Input Frequency | FPWM | 100 | 200 | 20k | Hz | |
| PWM Duty Ratio | Duty | 5 | - | 100 | % | |

# 6. Signal Interface Characteristic

## 6.1 Pixel Format Image

Following figure shows the relationship of the input signals and LCD pixel format.

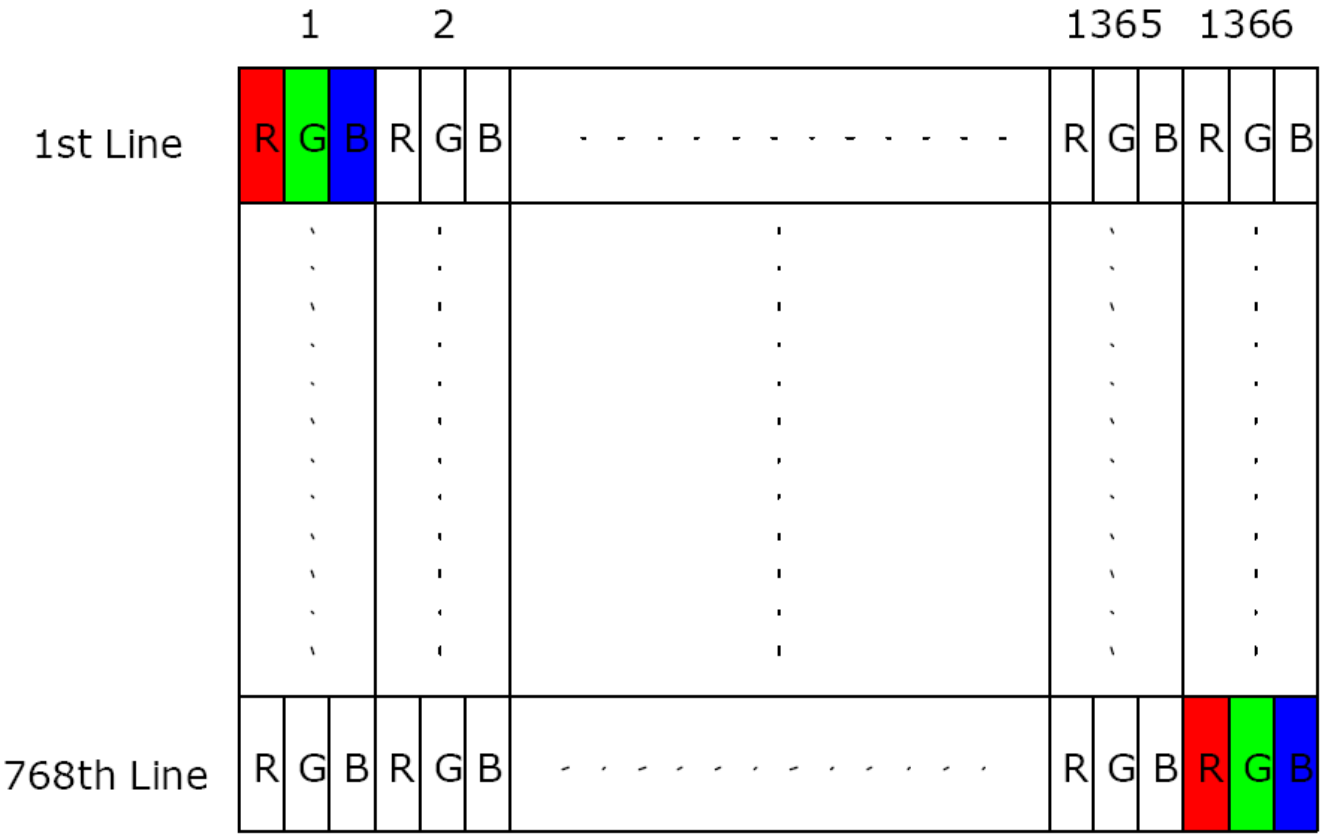

## 6.2 The Input Data Format

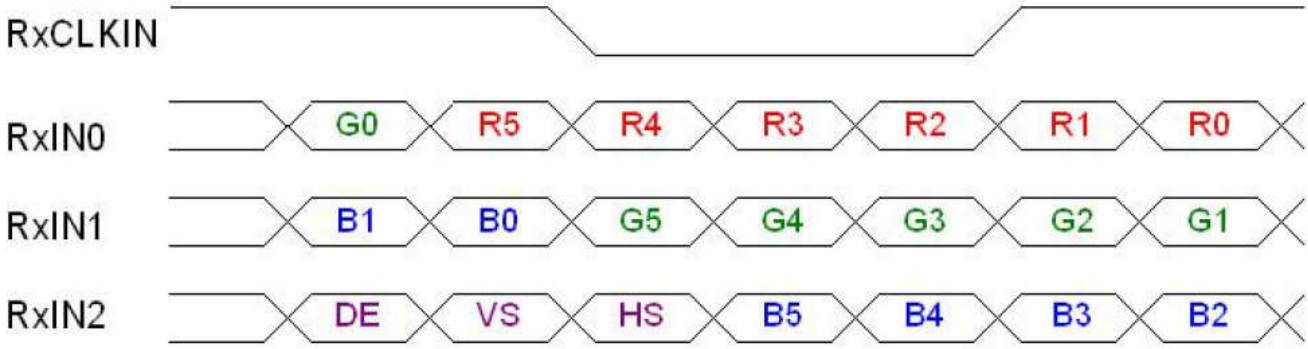


| Signal Name | Description | |
|---|---|---|
| R5<br>R4<br>R3<br>R2<br>R1<br>R0 | Red Data 5 (MSB)<br>Red Data 4<br>Red Data 3<br>Red Data 2<br>Red Data 1<br>Red Data 0 (LSB)<br><br>Red-pixel Data | Red-pixel Data<br>Each red pixel's brightness data consists of these 6 bits pixel data. |
| G5<br>G4<br>G3<br>G2<br>G1<br>G0 | Green Data 5 (MSB)<br>Green Data 4<br>Green Data 3<br>Green Data 2<br>Green Data 1<br>Green Data 0 (LSB)<br><br>Green-pixel Data | Green-pixel Data<br>Each green pixel's brightness data consists of these 6 bits pixel data. |
| B5<br>B4<br>B3<br>B2<br>B1<br>B0 | Blue Data 5 (MSB)<br>Blue Data 4<br>Blue Data 3<br>Blue Data 2<br>Blue Data 1<br>Blue Data 0 (LSB)<br><br>Blue-pixel Data | Blue-pixel Data<br>Each blue pixel's brightness data consists of these 6 bits pixel data. |
| RxCLKIN | Data Clock | The signal is used to strobe the pixel data and DE signals. All pixel data shall be valid at the falling edge when the DE signal is high. |
| DE | Display Timing | This signal is strobed at the falling edge of RxCLKIN. When the signal is high, the pixel data shall be valid to be displayed. |
| VS | Vertical Sync | The signal is synchronized to RxCLKIN . |
| HS | Horizontal Sync | The signal is synchronized to RxCLKIN . |

Note: Output signals from any system shall be low or High-impedance state when VDD is off.

## 6.3 Integration Interface Requirement

### 6.3.1 Connector Description

Physical interface is described as for the connector on module.

These connectors are capable of accommodating the following signals and will be following components.

| Connector Name / Designation | For Signal Connector |
|---|---|
| Manufacturer | IPEX or Compatible |
| Type / Part Number | IPEX 20455-040E-12A or Compatible |
| Mating Housing/Part Number | IPEX 20453-040T-01 or Compatible |

### 6.3.2 Pin Assignment

LVDS is a differential signal technology for LCD interface and high speed data transfer device.

| PIN# | Signal Name | Description |
|---|---|---|
| 1 | NC | No Connection (Reserve) |
| 2 | AVDD | PowerSupply,3.3V(typical) |
| 3 | AVDD | PowerSupply,3.3V(typical) |
| 4 | DVDD | DDC 3.3Vpower |
| 5 | NC | No Connection (Reserve) |
| 6 | SCL | DDC Clock |
| 7 | SDA | DDC Data |
| 8 | Rin0- | -LVDS differential data input(R0-R5,G0) |
| 9 | Rin0+ | +LVDS differential data input(R0-R5,G0) |
| 10 | GND | Ground |
| 11 | Rin1- | -LVDS differential data input(G1-G5,B0-B1) |
| 12 | Rin1+ | +LVDS differential data input(G1-G5,B0-B1) |
| 13 | GND | Ground |
| 14 | Rin2- | -LVDS differential data input(B2-B5,HS,VS,DE) |
| 15 | Rin2+ | +LVDS differential data input(B2-B5,HS,VS,DE) |
| 16 | GND | Ground |
| 17 | ClkIN- | -LVDS differential clock input |
| 18 | ClkIN+ | +LVDS differential clock input |
| 19 | GND | Ground–Shield |
| 20 | NC | No Connection (Reserve) |
| 21 | NC | No Connection (Reserve) |
| 22 | GND | Ground–Shield |

| | | |
|---|---|---|
| 23 | NC | No Connection (Reserve) |
| 24 | NC | No Connection (Reserve) |
| 25 | GND | Ground–Shield |
| 26 | NC | No Connection (Reserve) |
| 27 | NC | No Connection (Reserve) |
| 28 | GND | Ground–Shield |
| 29 | NC | No Connection (Reserve) |
| 30 | NC | No Connection (Reserve) |
| 31 | VLED_GND | LED Ground |
| 32 | VLED_GND | LED Ground |
| 33 | VLED_GND | LED Ground |
| 34 | NC | No Connection (Reserve) |
| 35 | PWM | System PWM Signal Input |
| 36 | LED_EN | LED enable pin(+3V Input) |
| 37 | NC | No Connection (Reserve) |
| 38 | VLED | LED Power Supply 6V-21V |
| 39 | VLED | LED Power Supply 6V-21V |
| 40 | VLED | LED Power Supply 6V-21V |

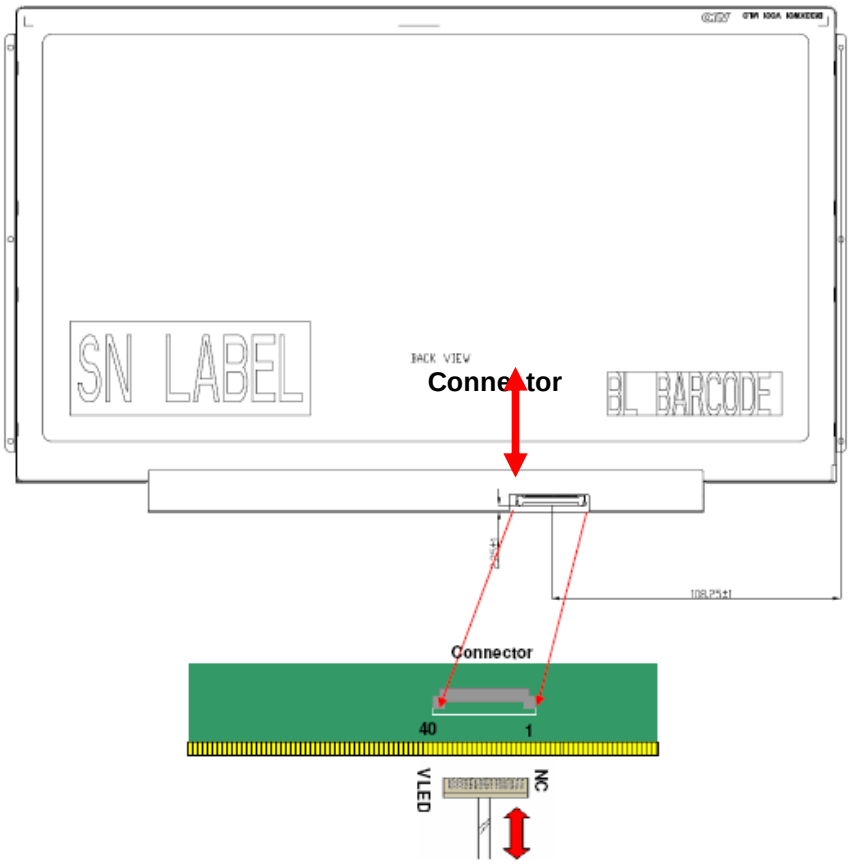

Note1: Input signals shall be low or High-impedance state when VDD is off.

## 6.4 Interface Timing

### 6.4.1 Timing Characteristics

Basically, interface timings should match the 1366x768 /60Hz manufacturing guide line timing.

| Parameter | | Symbol | Min. | Typ. | Max. | Unit |
|---|---|---|---|---|---|---|
| Frame Rate | | - | 50 | 60 | | Hz |
| Clock frequency | | 1/ $T_{Clock}$ | 50 | 69.3 | 80 | MHz |
| Vertical Section | Period | $T_V$ | 780 | 794 | | $T_{Line}$ |
| | Active | $T_{VD}$ | 768 | | | |
| | Blanking | $T_{VB}$ | 8 | 25 | 200 | |
| Horizontal Section | Period | $T_H$ | 1426 | 1456 | | $T_{Clock}$ |
| | Active | $T_{HD}$ | 1366 | | | |
| | Blanking | $T_{HB}$ | 60 | 90 | 720 | |

Note : DE mode only

### 6.4.2 Timing diagram

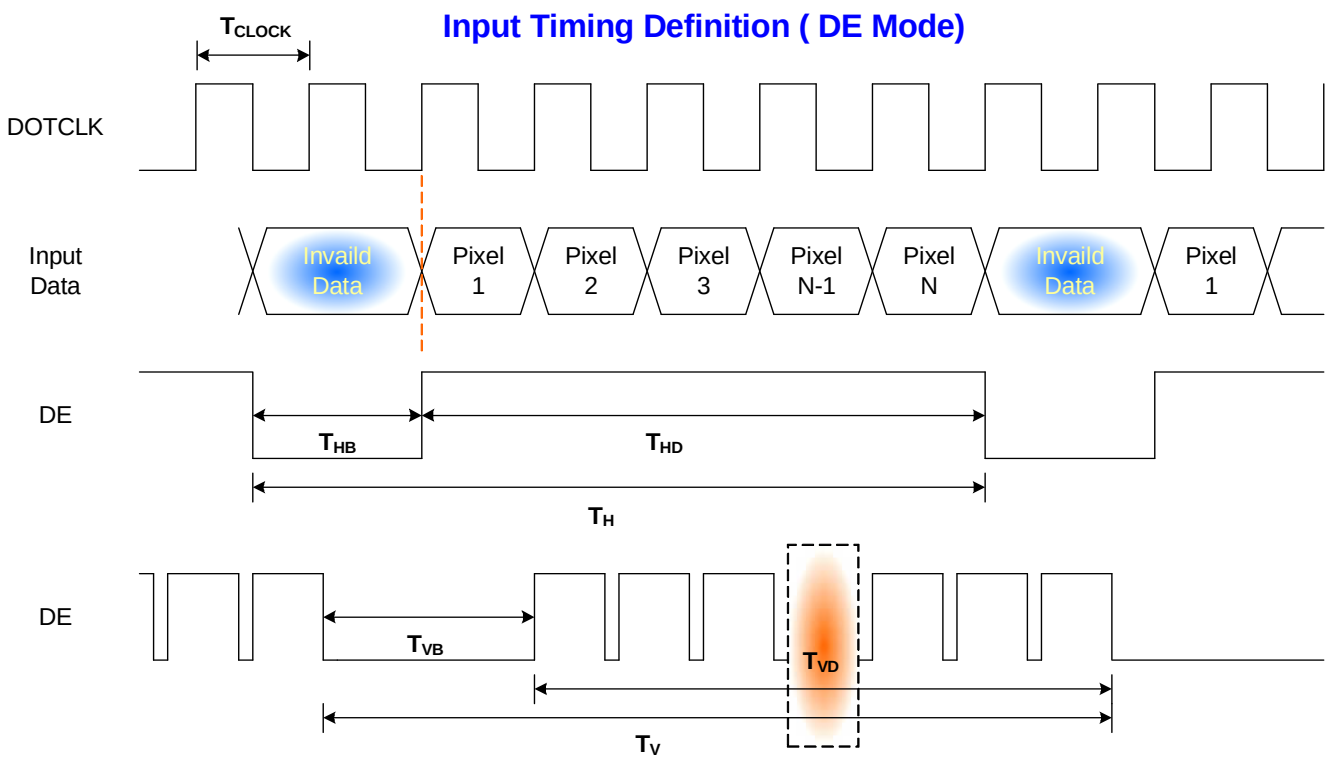

### 6.5 Power ON/OFF Sequence

Power on/off sequence is as follows. Interface signals and LED on/off sequence are also shown in the chart. Signals from any system shall be Hi-Z state or low level when VDD is off

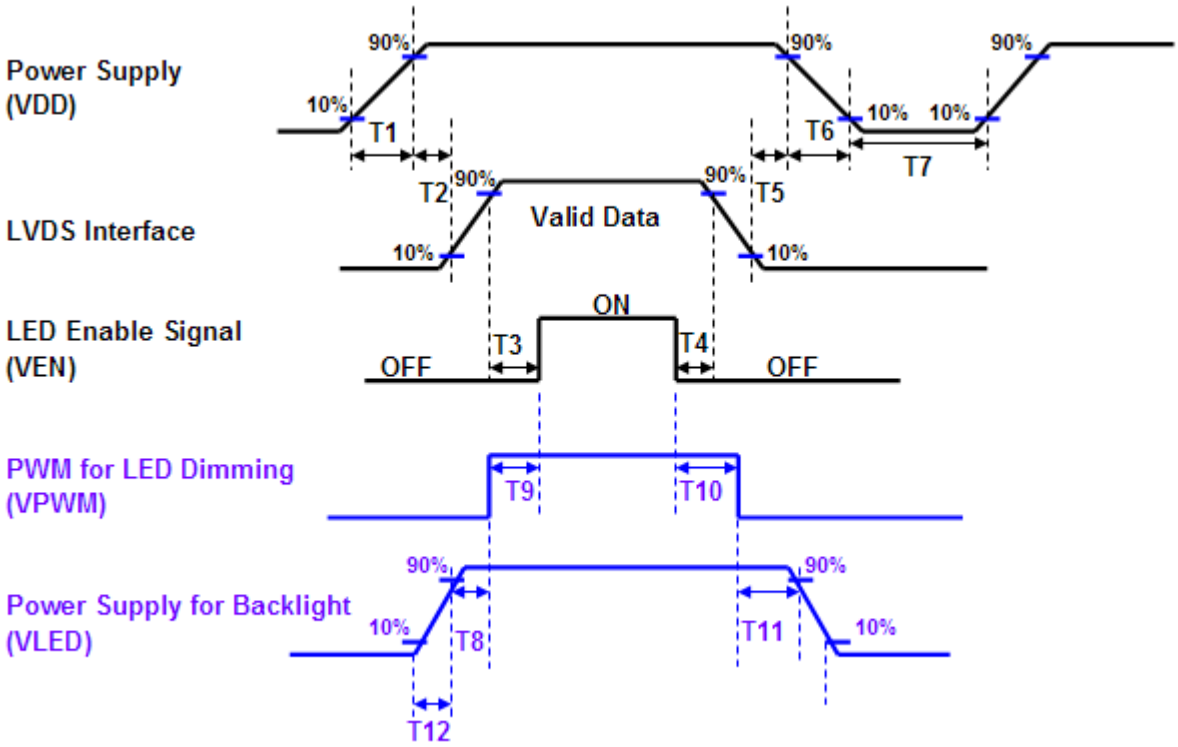


| Power Sequence Timing | | | |
|---|---|---|---|
| Parameter | Value | | Units |
| | Min. | Max. | |
| T1 | 0.5 | 10 | ms |
| T2 | 0 | 50 | |
| T3 | 200 | - | |
| T4 | 200 | - | |
| T5 | 0 | 50 | |
| T6 | 0 | 10 | |
| T7 | 500 | - | |
| T8 | 10 | - | |
| T9 | 10 | 180 | |
| T10 | 10 | 180 | |
| T11 | 10 | - | |
| T12 | 0.5 | 10 | |

# 7. Panel Reliability Test

## 7.1 Vibration Test

**Test Spec:**

- Test method: Non-Operation
- Acceleration: 1.5 G
- Frequency: 10 - 500Hz Random
- Sweep: 30 Minutes each Axis (X, Y, Z)

## 7.2 Shock Test

**Test Spec:**

- Test method: Non-Operation
- Acceleration: 220 G , Half sine wave
- Active time: 2 ms
- Pulse: X,Y,Z .one time for each side

## 7.3 Reliability Test

| Items | Required Condition | Note |
|---|---|---|
| **Temperature Humidity Bias** | **Ta= 40℃, 90%RH, 300h** | |
| **High Temperature Operation** | **Ta= 50℃, Dry, 300h** | |
| **Low Temperature Operation** | **Ta= 0℃, 300h** | |
| **High Temperature Storage** | **Ta= 60℃, 35%RH, 300h** | |
| **Low Temperature Storage** | **Ta= -20℃, 50%RH, 250h** | |
| **Thermal Shock Test** | **Ta=-20℃to 60℃, Duration at 30 min, 100 cycles** | |
| **ESD** | **Contact : ±8 KV**<br>**Air : ±15 KV** | Note 1 |

**Note1:** According to EN 61000-4-2 , ESD class B: Some performance degradation allowed. Self-recoverable. No data lost, No hardware failures.

**Remark:** MTBF (Excluding the LED): 30,000 hours with a confidence level 90%

# 8. Mechanical Characteristics

## 8.1 LCM Outline Dimension

### 8.1.1 Standard Front View

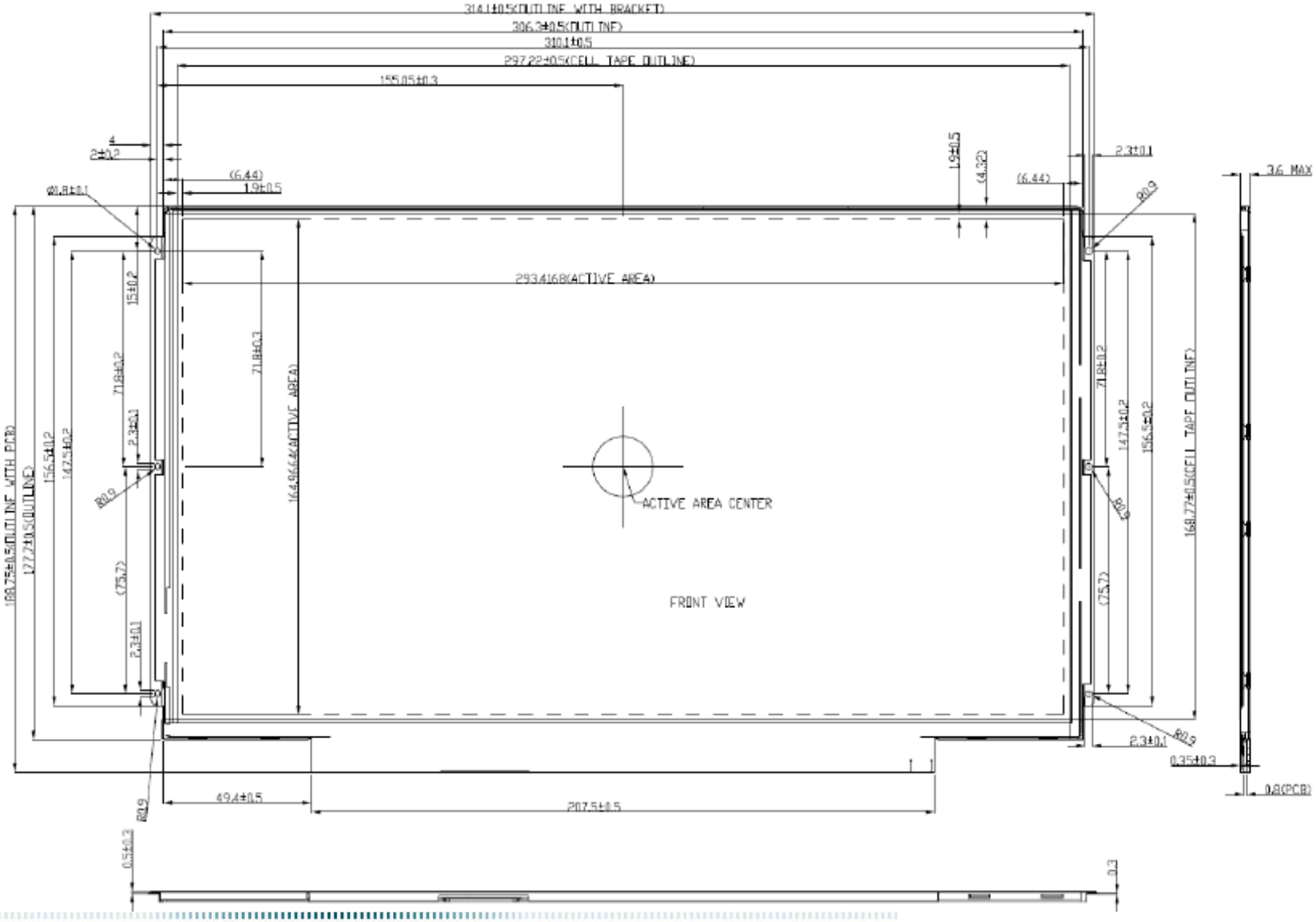

### 8.1.2 Standard Rear View

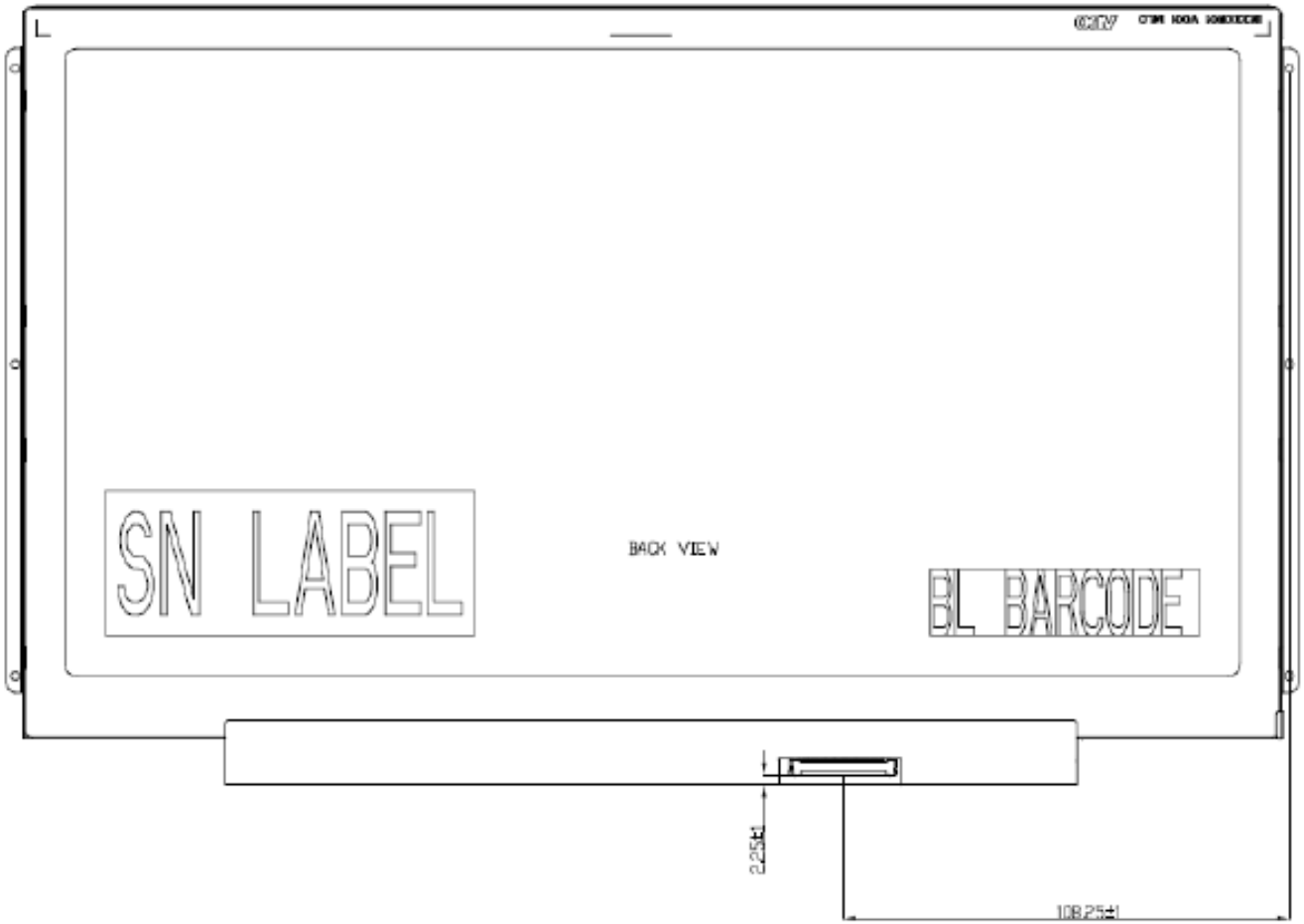


Note: Prevention IC damage, IC positions not allowed any overlap over these areas.

# 9. Shipping and Package

## 9.1 Shipping Label Format

## 9.2 Carton Package

The outside dimension of carton is 455 (L)mm x 380 (W)mm x 355 (H)mm

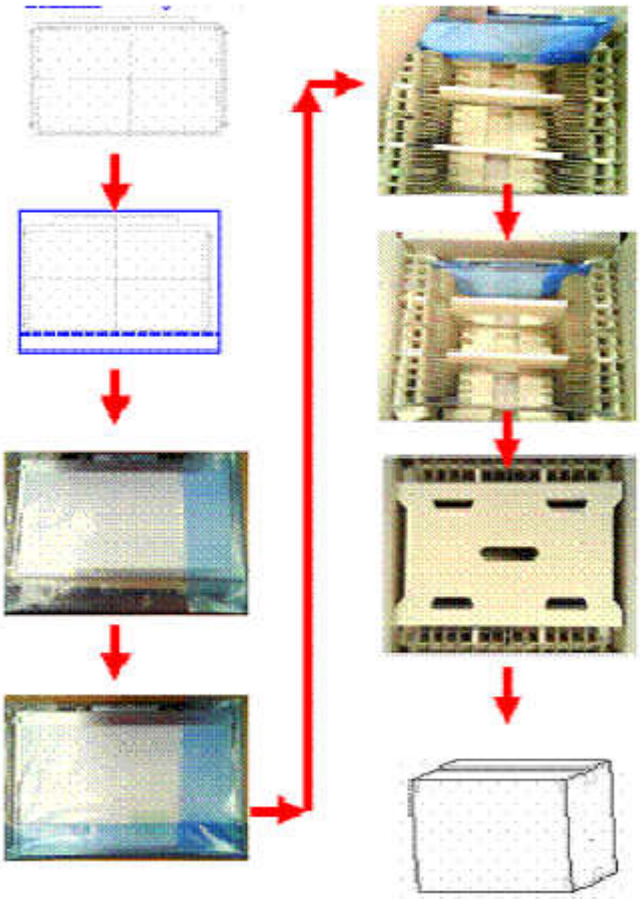

## 9.3 Shipping Package of Palletizing Sequence

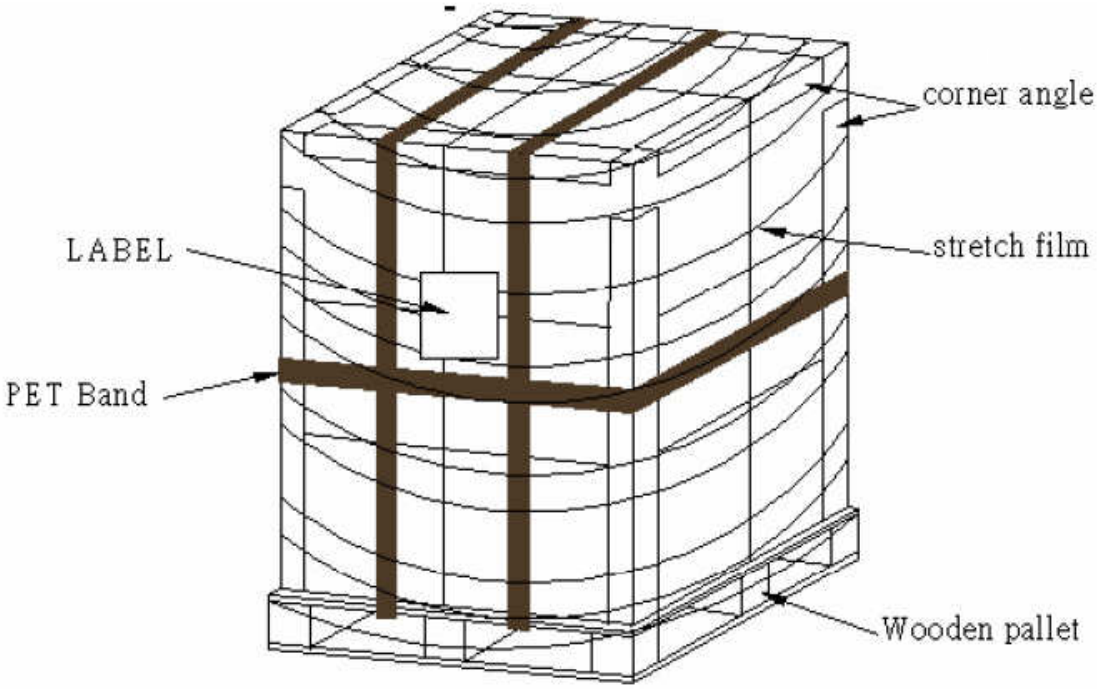

## 10. Appendix: EDID Description

| Address | FUNCTION | Value | Value | Value | Note |
|---|---|---|---|---|---|
| HEX | | HEX | BIN | DEC | |
| 00 | Header | 00 | 00000000 | 0 | |
| 01 | | FF | 11111111 | 255 | |
| 02 | | FF | 11111111 | 255 | |
| 03 | | FF | 11111111 | 255 | |
| 04 | | FF | 11111111 | 255 | |
| 05 | | FF | 11111111 | 255 | |
| 06 | | FF | 11111111 | 255 | |
| 07 | | 00 | 00000000 | 0 | |
| 08 | EISA Manuf. Code LSB | 06 | 00000110 | 6 | |
| 09 | Compressed ASCII | AF | 10101111 | 175 | |
| 0A | Product Code | 2C | 00101100 | 44 | |
| 0B | hex, LSB first | 15 | 00010101 | 21 | |
| 0C | 32-bit ser # | 00 | 00000000 | 0 | |
| 0D | | 00 | 00000000 | 0 | |
| 0E | | 00 | 00000000 | 0 | |
| 0F | | 00 | 00000000 | 0 | |
| 10 | Week of manufacture | 01 | 00000001 | 1 | |
| 11 | Year of manufacture | 12 | 00010010 | 18 | |
| 12 | EDID Structure Ver. | 01 | 00000001 | 1 | |
| 13 | EDID revision # | 03 | 00000011 | 3 | |
| 14 | **Video input def.** *(digital I/P, non-TMDS, CRGB)* | 80 | 10000000 | 128 | |
| 15 | **Max H image size** *(rounded to cm)* | 1D | 00011101 | 29 | |
| 16 | **Max V image size** *(rounded to cm)* | 10 | 00010000 | 16 | |
| 17 | **Display Gamma** *(=(gamma*100)-100)* | 78 | 01111000 | 120 | |
| 18 | **Feature support** *(no DPMS, Active OFF, RGB, tmg Blk#1)* | 0A | 00001010 | 10 | |
| 19 | Red/green low bits **(Lower 2:2:2:2 bits)** | 05 | 00000101 | 5 | |
| 1A | Blue/white low bits **(Lower 2:2:2:2 bits)** | E5 | 11100101 | 229 | |
| 1B | Red x **(Upper 8 bits)** | 97 | 10010111 | 151 | |
| 1C | Red y/ highER 8 bits | 57 | 01010111 | 87 | |
| 1D | Green x | 53 | 01010011 | 83 | |
| 1E | Green y | 93 | 10010011 | 147 | |
| 1F | Blue x | 27 | 00100111 | 39 | |
| 20 | Blue y | 22 | 00100010 | 34 | |
| 21 | White x | 50 | 01010000 | 80 | |
| 22 | White y | 54 | 01010100 | 84 | |
| 23 | Established timing 1 | 00 | 00000000 | 0 | |

| | | | | | |
|---|---|---|---|---|---|
| **24** | Established timing 2 | 00 | 00000000 | 0 | |
| **25** | Established timing 3 | 00 | 00000000 | 0 | |
| **26** | Standard timing #1 | 01 | 00000001 | 1 | |
| **27** | | 01 | 00000001 | 1 | |
| **28** | Standard timing #2 | 01 | 00000001 | 1 | |
| **29** | | 01 | 00000001 | 1 | |
| **2A** | Standard timing #3 | 01 | 00000001 | 1 | |
| **2B** | | 01 | 00000001 | 1 | |
| **2C** | Standard timing #4 | 01 | 00000001 | 1 | |
| **2D** | | 01 | 00000001 | 1 | |
| **2E** | Standard timing #5 | 01 | 00000001 | 1 | |
| **2F** | | 01 | 00000001 | 1 | |
| **30** | Standard timing #6 | 01 | 00000001 | 1 | |
| **31** | | 01 | 00000001 | 1 | |
| **32** | Standard timing #7 | 01 | 00000001 | 1 | |
| **33** | | 01 | 00000001 | 1 | |
| **34** | Standard timing #8 | 01 | 00000001 | 1 | |
| **35** | | 01 | 00000001 | 1 | |
| **36** | Pixel Clock/10000 LSB | 12 | 00010010 | 18 | |
| **37** | Pixel Clock/10000 USB | 1B | 00011011 | 27 | |
| **38** | Horz active **Lower 8bits** | 56 | 01010110 | 86 | |
| **39** | Horz blanking **Lower 8bits** | 5A | 01011010 | 90 | |
| **3A** | HorzAct:HorzBlnk **Upper 4:4 bits** | 50 | 01010000 | 80 | |
| **3B** | Vertical Active **Lower 8bits** | 00 | 00000000 | 0 | |
| **3C** | Vertical Blanking **Lower 8bits** | 19 | 00011001 | 25 | |
| **3D** | Vert Act : Vertical Blanking **(upper 4:4 bit)** | 30 | 00110000 | 48 | |
| **3E** | HorzSync. Offset | 30 | 00110000 | 48 | |
| **3F** | HorzSync.Width | 20 | 00100000 | 32 | |
| **40** | VertSync.Offset : VertSync.Width | 36 | 00110110 | 54 | |
| **41** | Horz&Vert Sync Offset/Width **Upper 2bits** | 00 | 00000000 | 0 | |
| **42** | Horizontal Image Size **Lower 8bits** | 25 | 00100101 | 37 | |
| **43** | Vertical Image Size **Lower 8bits** | A4 | 10100100 | 164 | |
| **44** | Horizontal & Vertical Image Size **(upper 4:4 bits)** | 10 | 00010000 | 16 | |
| **45** | Horizontal Border *(zero for internal LCD)* | 00 | 00000000 | 0 | |
| **46** | Vertical Border *(zero for internal LCD)* | 00 | 00000000 | 0 | |
| **47** | Signal *(non-intr, norm, no stero, sep sync, neg pol)* | 18 | 00011000 | 24 | |
| **48** | Detailed timing/monitor | 00 | 00000000 | 0 | |
| **49** | descriptor #2 | 00 | 00000000 | 0 | |
| **4A** | | 00 | 00000000 | 0 | |

| | | | | | |
|---|---|---|---|---|---|
| **4B** | | 0F | 00001111 | 15 | |
| **4C** | | 00 | 00000000 | 0 | |
| **4D** | | 00 | 00000000 | 0 | |
| **4E** | | 00 | 00000000 | 0 | |
| **4F** | | 00 | 00000000 | 0 | |
| **50** | | 00 | 00000000 | 0 | |
| **51** | | 00 | 00000000 | 0 | |
| **52** | | 00 | 00000000 | 0 | |
| **53** | | 00 | 00000000 | 0 | |
| **54** | | 00 | 00000000 | 0 | |
| **55** | | 00 | 00000000 | 0 | |
| **56** | | 00 | 00000000 | 0 | |
| **57** | | 00 | 00000000 | 0 | |
| **58** | | 00 | 00000000 | 0 | |
| **59** | | 20 | 00100000 | 32 | |
| **5A** | Detailed timing/monitor | 00 | 00000000 | 0 | |
| **5B** | descriptor #3 | 00 | 00000000 | 0 | |
| **5C** | | 00 | 00000000 | 0 | |
| **5D** | | FE | 11111110 | 254 | |
| **5E** | | 00 | 00000000 | 0 | |
| **5F** | Manufacture | 41 | 01000001 | 65 | A |
| **60** | Manufacture | 55 | 01010101 | 85 | U |
| **61** | Manufacture | 4F | 01001111 | 79 | O |
| **62** | | 0A | 00001010 | 10 | |
| **63** | | 20 | 00100000 | 32 | |
| **64** | | 20 | 00100000 | 32 | |
| **65** | | 20 | 00100000 | 32 | |
| **66** | | 20 | 00100000 | 32 | |
| **67** | | 20 | 00100000 | 32 | |
| **68** | | 20 | 00100000 | 32 | |
| **69** | | 20 | 00100000 | 32 | |
| **6A** | | 20 | 00100000 | 32 | |
| **6B** | | 20 | 00100000 | 32 | |
| **6C** | Detailed timing/monitor | 00 | 00000000 | 0 | |
| **6D** | descriptor #4 | 00 | 00000000 | 0 | |
| **6E** | | 00 | 00000000 | 0 | |
| **6F** | | FE | 11111110 | 254 | |
| **70** | | 00 | 00000000 | 0 | |
| **71** | Manufacture P/N | 42 | 01000010 | 66 | B |

| | | | | | |
|---|---|---|---|---|---|
| **72** | Manufacture P/N | 31 | 00110001 | 49 | 1 |
| **73** | Manufacture P/N | 33 | 00110011 | 51 | 3 |
| **74** | Manufacture P/N | 33 | 00110011 | 51 | 3 |
| **75** | Manufacture P/N | 58 | 01011000 | 88 | X |
| **76** | Manufacture P/N | 57 | 01010111 | 87 | W |
| **77** | Manufacture P/N | 30 | 00110000 | 48 | 0 |
| **78** | Manufacture P/N | 31 | 00110001 | 49 | 1 |
| **79** | Manufacture P/N | 20 | 00100000 | 32 | |
| **7A** | Manufacture P/N | 56 | 01010110 | 86 | V |
| **7B** | Manufacture P/N | 35 | 00110101 | 53 | 5 |
| **7C** | | 20 | 00100000 | 32 | |
| **7D** | | 0A | 00001010 | 10 | |
| **7E** | Extension Flag | 00 | 00000000 | 0 | |
| **7F** | Checksum | 2A | 00101010 | 42 | |