SmarterGlass

state-of-the-art display solutions

www.smarterglass.com
978 997 4104
sales@smarterglass.com

SPECIFICATION
FOR
APPROVAL

( ) Preliminary Specification
(●) Final Specification

Title	12.1” XGA TFT LCD

BUYER	
MODEL	

SUPPLIER	**Bi-Search Int’l, Inc.**
***MODEL**	**EG121X1**
SUFFIX	**L02-THA**

SIGNATURE	**DATE**
/	
/	
/	

Please return 1 copy for your confirmation with your signature and comments.

APPROVED BY	**DATE**
Y.K. Kim / S.Manager	
REVIEWED BY	
Y.W. Kim / Manager	
PREPARED BY	
Young K. Kim / Engineer	

Product Engineering Dept.
Bi-Search Int’l, Inc.

Contents

RECORD OF REVISIONS

Revision No	Revision Date	Page	Description
0.0	Dec. 08. 2008	-	First Draft
0.1	Jan. 11.2009	5	Outline Dimension Correction
0.1	Jan. 11.2009		
0.1	Jan. 11.2009	24	Outline Drawing Update
0.1	Jan. 11.2009	25	Outline Drawing Update

1. GENERAL DESCRIPTION

1.1 OVERVIEW

The EG121X1-L02-THA model is a 12.1" TFT-LCD module with a 2-LED Backlight Unit and a 20-pin 1ch-LVDS interface. This module supports 1024 x 768 XGA mode and displays 262,144 colors. The LED Driver module for the Backlight Unit is not built in.

1.2 FEATURES

- Wide viewing angle
- High contrast ratio
- Fast response time
- XGA (1024 x 768 pixels) resolution
- Wide operating temperature
- DE (Data Enable) mode
- LVDS (Low Voltage Differential Signaling) interface
- RoHS Compliance
- Led Replaceable
- Sunlight Readable

1.3 APPLICATION

- TFT LCD Monitor
- TFT LCD TV
- Industrial Application
- Amusement
- Vehicle

1.4 GENERAL SPECIFICATI0NS

Item	Specification	Unit	Note
Diagonal Size	12.1	Inch	(1)
Active Area	245.76(H) x 184.32(V)	mm	
Bezel Opening Area	249.0 x 187.5	mm	
Driver Element	a-si TFT active matrix	-	-
Pixel Number	1024 x R.G.B. x 768	Pixel	-
Pixel Pitch	0.240(H) x 0.240(V)	mm	-
Pixel Arrangement	RGB vertical stripe	-	-
Display Colors	262,144	Color	-
Transmissive Mode	Normally white	-	-
Surface Treatment	Anti-Reflection Coated	-	-
Luminance, white	1000 (Min. 1 Point)	cd/m^2	-
Power Consumption	10.32 (Typ.)	Watt	

Product Specification

1.5 MECHANICAL SPECIFICATIONS

Itenm		Min	Typ	max	Unit	Note
Module Size	Horizontal (H)	260.0	260.5	261.0	mm	(1)
	Vertical (V)	203.5	204	204.5	mm	
	Depth (D)	(11.95)	(12.45)	(12.95)	mm	
Weight		-	-	(700)	g	-
I/F connector mounting position		The mounting inclination of the connector makes the screen center within ±0.5mm as the horizontal.			-	(2)

Note (1) Please refer to the attached drawings for more information of front and back outline dimensions.

(2) Connector mounting position

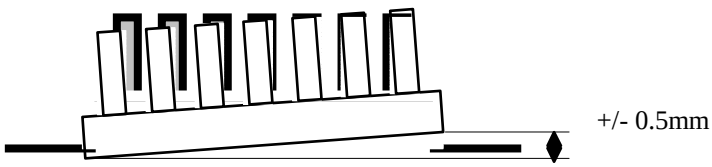

2. ABSOLUTE MAXIMUM RATINGS

2.1 ABSOLUTE RATINGS OF ENVIRONMENT

Test Item	Test Condition	Note
High Temperature Storage Test	90ºC, 240 hours	(1)(2)
Low Temperature Storage Test	-40ºC, 240 hours	
Thermal Shock Storage Test	-40ºC, 0.5hour←→80℃, 0.5hour; 1hour/cycle,100cycles	
High Temperature Operation Test	80ºC, 240 hours	
Low Temperature Operation Test	-30ºC, 240 hours	
High Temperature & High Humidity Operation Test	60ºC, 90%RH, 240hours	
Shock (Non-Operating)	200G, 2ms, half sine wave, 1 time for ± X, ± Y, ± Z.	(3)
Vibration (Non-Operating)	1.5G, 10 ~ 300 Hz, 10min/cycle, 3 cycles each X, Y, Z	(3)

Note (1) There should be no condensation on the surface of panel during test.

Note (2) Temperature of panel display surface area should be 90 C Max.

Note (3) At testing Vibration and Shock, the fixture in holding the module has to be hard and rigid enough so that the module would not be twisted or bent by the fixture.

Note (4) In the standard conditions, there is no function failure issue occurred. All the cosmetic specification is judged before the reliability test

2.2 ELECTRICAL ABSOLUTE RATINGS

2.2.1 TFT LCD MODULE

Item	Symbol	Value		Unit	Note
		Min	Max		
Power Supply Voltage	Vcc	-0.3	4.0	V	(1)
Logic Input Voltage	V_{IN}	-0.3	2.7	v	

2.2.2 BACKLIGHT UNIT

Item	Symbol	Value		Unit	Note
		Min	Max		
Led Voltage	V_L	-	12	V_{RMS}	
Led Current	I_L	0.86	-	A_{RMS}	

Note (1) Permanent damage to the device may occur if maximum values are exceeded. Function operation should be restricted to the conditions described under Normal Operating Conditions. .

3. ELECTRICAL CHARACTERISTICS

3.1 TFT LCD MODULE

Parameter		Symbol	Value			Unit	Note
			Min	Typ	Max		
Power Supply Voltage		Vcc	3.0	3.3	3.6	V	-
Ripple Voltage		V_{RP}	-	-	100	mV	-
Rush Current		I_{RUSH}	-	-	1.0	A	(2)
Power Supply Current	White	-	-	350	490	mA	(3)a
	Black		-	510	650	mA	(3)b
LVDS differential input voltage		Vid	-100	-	+100	mV	-
LVDS common input voltage		Vic	-	1.2	-	V	-

Note (1) The module is recommended to operate within specification ranges listed above for normal function.

Note (2) Measurement Conditions:

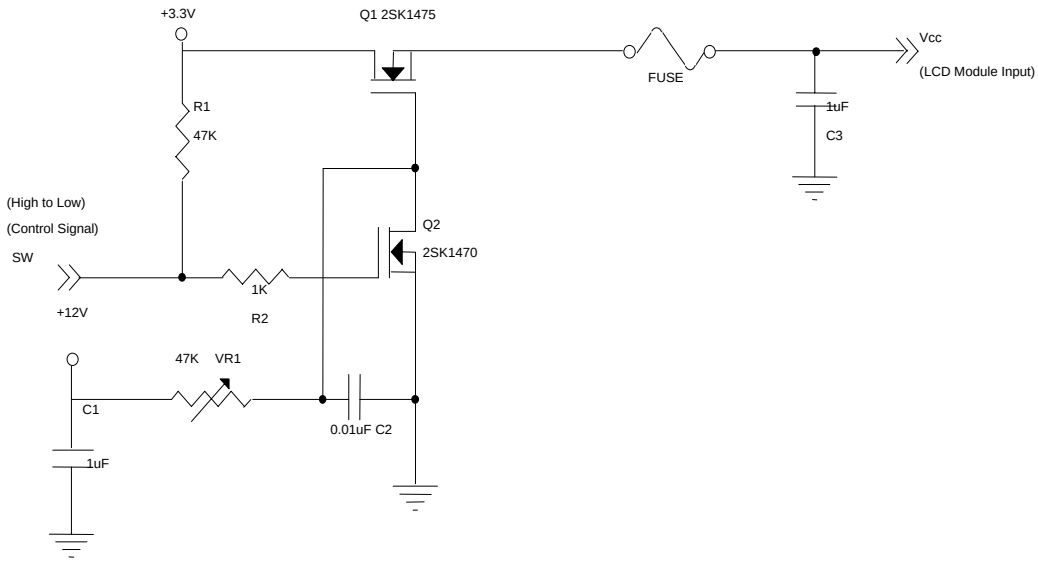

Vcc rising time is 470μs

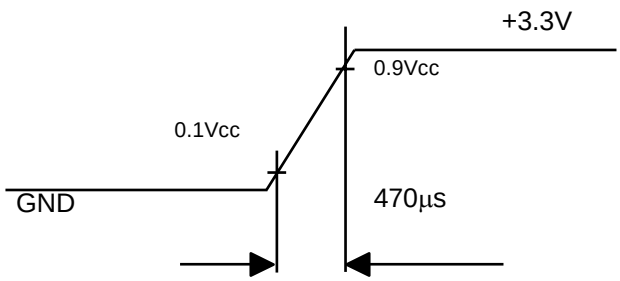

Note (3) The specified power supply current is under the conditions at Vcc = 3.3 V, Ta = 25 ± 2 C, f_v = 60 Hz, whereas a power dissipation check pattern below is displayed.

a. White Pattern

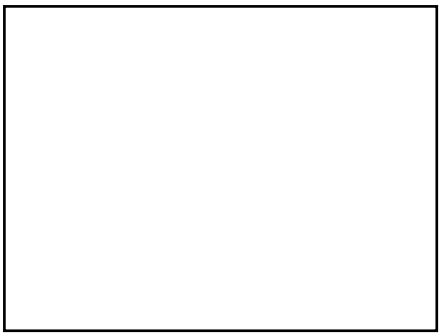

Active Area

b. Black Pattern

Active Area

3.2 BACKLIGHT UNIT

Parameter	Symbol	Value			Unit	Note
		Min	Typ	Max		
Led Input Voltage	Vcc	-	12	-	V	-
Led Current	A_{RP}	-	0.86	-	A	-
Led Life Time		50.000	-	-	Hrs	-
Power Consumption			10.32		W	-

The backlight interface connector is a model BHR-03VS-1, manufactured by JST. The mating connector part number is SM02B(8.0)B-BHS-1-TB or equivalent.

Backlight connector diagram

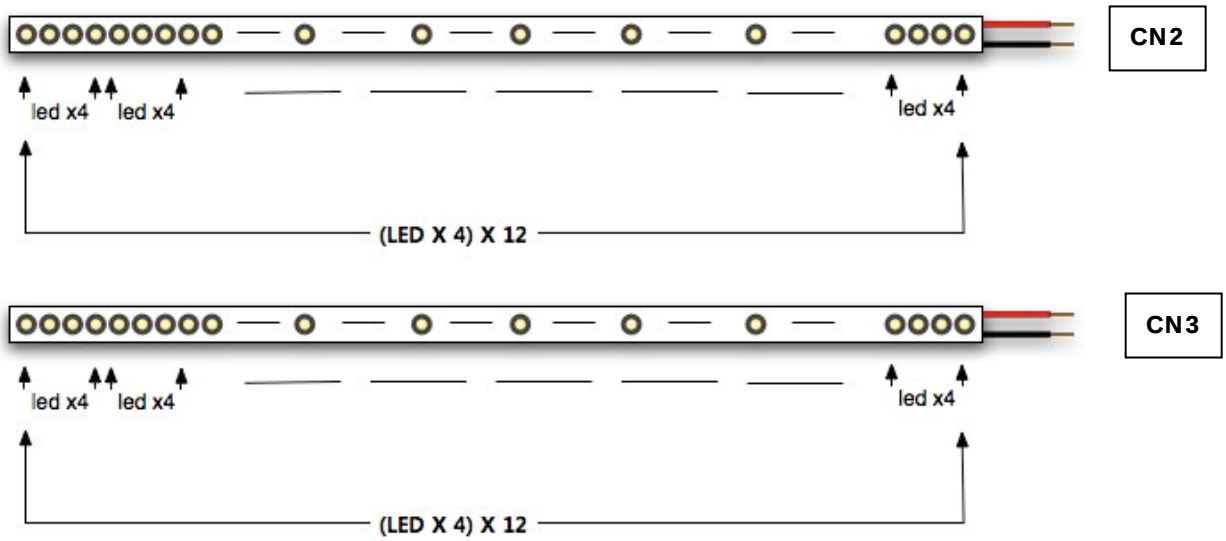

Note : **The design of the LED Driver must have specification for the led in LCD Assembly.**
The performance of the LED in LCM, for example life time or brightness, is extremely influenced by the characteristics of the DC-DC LED Driver. So all the parameters of an LED Driver should be carefully designed so as not to produce too much leakage current from high-voltage output of the LED Driver. When you design or order the LED Driver, please make sure unwanted lighting caused by the mismatch of the LED and the LED Driver(no lighting, flicker, etc) never occurs. When you confirm it, the LCD Assembly should be operated in the same condition as installed in you instrument.

1. The specified current and power consumption are under the V_{CC}=3.3V, 25˚C,f_V=60Hz condition whereas mosaic pattern is displayed and f_V is the frame frequency.
2. The variance of the voltage is ± 10%.
3. The voltage above V_S should be applied to the leds for more than 1 second for start-up. Otherwise, the leds may not be turned on. The used LED current is the LED typical current.
4. The output of the LED Driver must have symmetrical(negative and positive) voltage waveform and symmetrical current waveform.(Unsymmetrical ratio is less than 10%) Please do not use the LED Driver which has unsymmetrical voltage and unsymmetrical current and spike wave.
   LED frequency may produce interface with horizontal synchronous frequency and as a result this may cause beat on the display. Therefore LED frequency shall be as away possible from the horizontal synchronous frequency and from its harmonics in order to prevent interference.
5. Let's define the brightness of the LED after being lighted for 5 minutes as 100%.
   T_s is the time required for the brightness of the center of the led to be not less than 95%.
6. The LED power consumption shown above does not include loss of external LED Driver.
   The used LED current is the LED typical current.
7. The life is determined as the time at which brightness of the LED is 50% compared to that of initial value at the typical LED current on condition of continuous operating at 25 ± 2˚C.
8. Do not attach a conducting tape to LED connecting wire.
   If the LED wire attach to a conducting tape, TFT-LCD Module has a low luminance and the LED Driver has abnormal action. Because leakage current is occurred between LED wire and conducting tape.

4. BLOCK DIAGRAM

4.1 TFT LCD MODULE

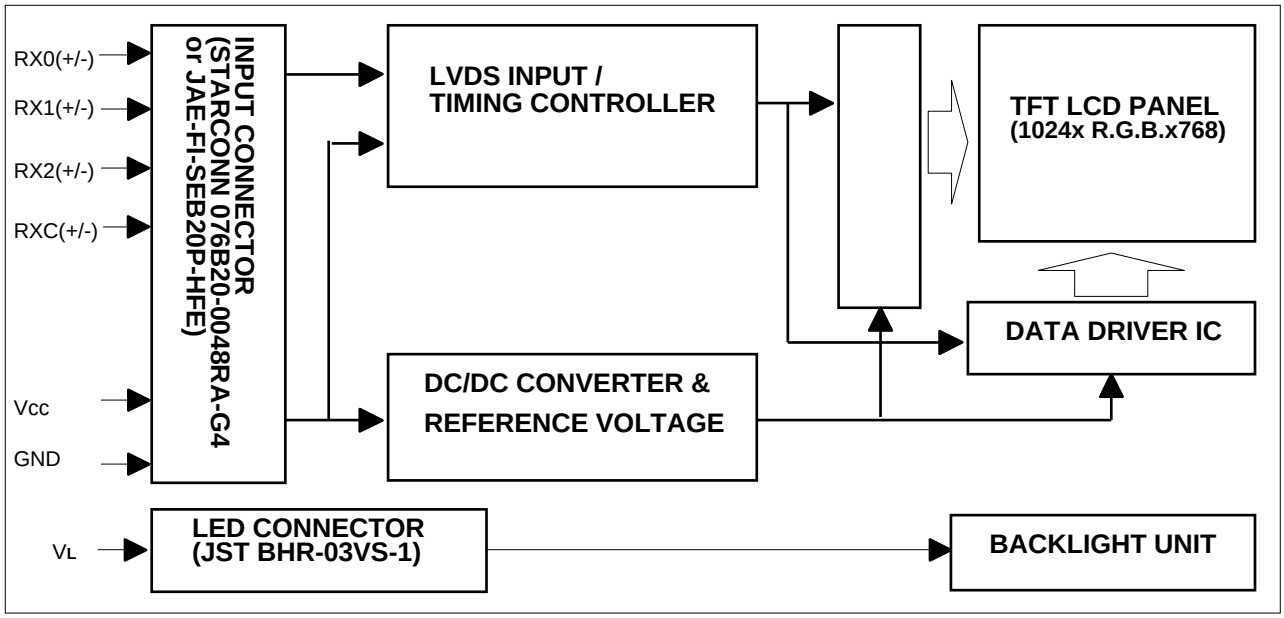

4.2 BACKLIGHT UNIT

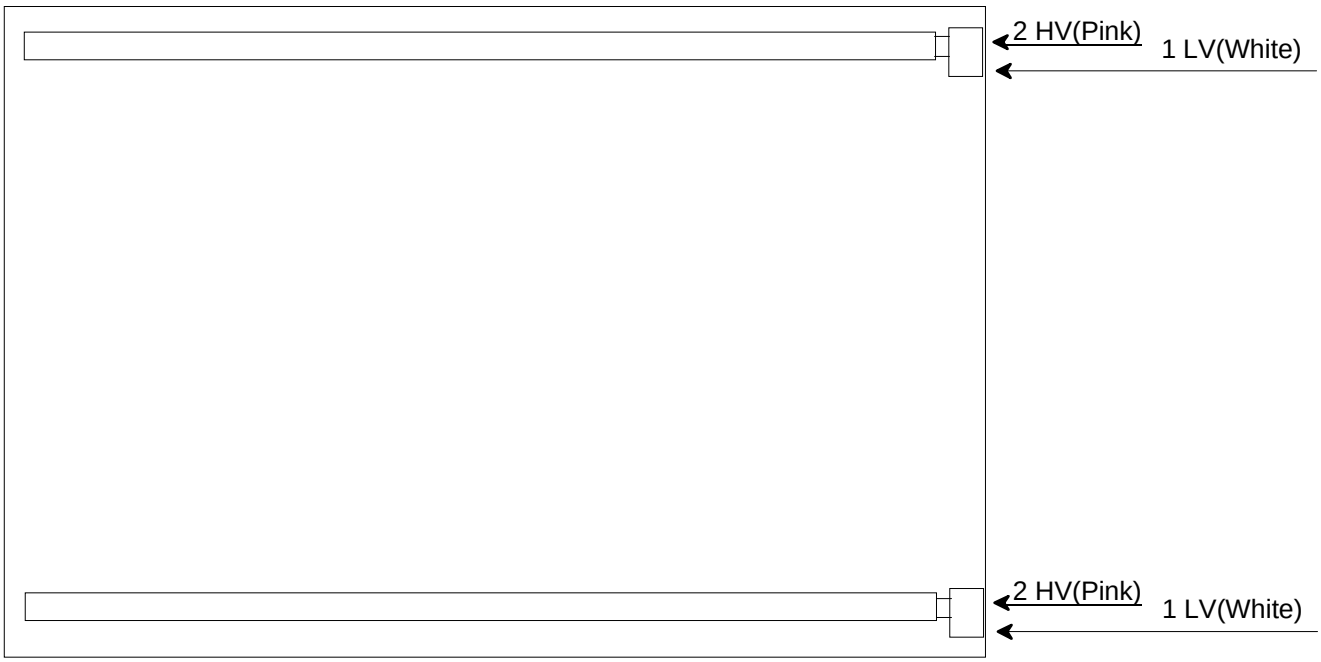

5. INPUT TERMINAL PIN ASSIGNMENT

5.1 TFT LCD MODULE

Pin	Name	Description	Remark
1	VCC_IN	Power Supply (3.3V)	
2	VCC_IN	Power Supply (3.3 V)	
3	GND	Ground	
4	GND	Ground	
5	RX0-	Differential Data Input, CH0 (Negative)	R0 ~ R5, G0
6	RX0+	Differential Data Input, CH0 (Positive)	
7	GND	Ground	
8	RX1-	Differential Data Input, CH1 (Negative)	G1 ~ G5, B0, B1
9	RX1+	Differential Data Input , CH1 (Positive)	
10	GND	Ground	
11	RX2-	Differential Data Input , CH2 (Negative)	B2 ~ B5, DE, Hsync, Vsync
12	RX2+	Differential Data Input , CH2 (Positive)	
13	GND	Ground	
14	CLK-	Differential Clock Input (Negative)	LVDS Level Clock
15	CLK+	Differential Clock Input (Positive)	
16	GND	Ground	
17	NA	Non-connection	
18	NA	Non-connection	
19	GND	Ground	
20	GND	Ground	

Note (1) Connector Part No.: STARCONN 076B20-0048RA-G4 or JAE FI-SEB20P-HFE or equivalent.

Note (2) Mating Connector Part No.: JAE-FI-SE20M, FI-S20S or equivalent.

Note (3) The first pixel is odd.

Note (4) Input signal of even and odd clock should be the same timing.

5.2 BACKLIGHT UNIT

Pin	Symbol	Description	Notes
1	LV	Low Voltage (White Color)	-
2	NC	-	-
3	HV	High Voltage (Pink Color)	-

Note (1) Connector Part No.: JST BHR-03VS-1 or equivalent

Note (2) User's connector Part No.: JST SM03(4.0)B-BHS-1-TB or equivalent

5.3 COLOR DATA INPUT ASSIGNMENT

The brightness of each primary color (red, green and blue) is based on the 6-bit gray scale data input for the color. The higher the binary input, the brighter the color. The table below provides the assignment of color

Color		Data Signal																	
		Red						Green						Blue					
		R5	R4	R3	R2	R1	R0	G5	G4	G3	G2	G1	G0	B5	B4	B3	B2	B1	B0
Basic Colors	Black	0	0	0	0	0	0	0	0	0	0	0	0	0	0	0	0	0	0
	Red	1	1	1	1	1	1	0	0	0	0	0	0	0	0	0	0	0	0
	Green	0	0	0	0	0	0	1	1	1	1	1	1	0	0	0	0	0	0
	Blue	0	0	0	0	0	0	0	0	0	0	0	0	1	1	1	1	1	1
	Cyan	0	0	0	0	0	0	1	1	1	1	1	1	1	1	1	1	1	1
	Magenta	1	1	1	1	1	1	0	0	0	0	0	0	1	1	1	1	1	1
	Yellow	1	1	1	1	1	1	1	1	1	1	1	1	0	0	0	0	0	0
	White	1	1	1	1	1	1	1	1	1	1	1	1	1	1	1	1	1	1
Gray Scale Of Red	Red(0)/Dark	0	0	0	0	0	0	0	0	0	0	0	0	0	0	0	0	0	0
	Red(1)	0	0	0	0	0	1	0	0	0	0	0	0	0	0	0	0	0	0
	Red(2)	0	0	0	0	1	0	0	0	0	0	0	0	0	0	0	0	0	0
	:	:	:	:	:	:	:	:	:	:	:	:	:	:	:	:	:	:	:
	:	:	:	:	:	:	:	:	:	:	:	:	:	:	:	:	:	:	:
	Red(61)	1	1	1	1	0	1	0	0	0	0	0	0	0	0	0	0	0	0
	Red(62)	1	1	1	1	1	0	0	0	0	0	0	0	0	0	0	0	0	0
	Red(63)	1	1	1	1	1	1	0	0	0	0	0	0	0	0	0	0	0	0
Gray Scale Of Green	Green(0)/Dark	0	0	0	0	0	0	0	0	0	0	0	0	0	0	0	0	0	0
	Green(1)	0	0	0	0	0	0	0	0	0	0	0	1	0	0	0	0	0	0
	Green(2)	0	0	0	0	0	0	0	0	0	0	1	0	0	0	0	0	0	0
	:	:	:	:	:	:	:	:	:	:	:	:	:	:	:	:	:	:	:
	:	:	:	:	:	:	:	:	:	:	:	:	:	:	:	:	:	:	:
	Green(61)	0	0	0	0	0	0	1	1	1	1	0	1	0	0	0	0	0	0
	Green(62)	0	0	0	0	0	0	1	1	1	1	1	0	0	0	0	0	0	0
	Green(63)	0	0	0	0	0	0	1	1	1	1	1	1	0	0	0	0	0	0
Gray Scale Of Blue	Blue(0)/Dark	0	0	0	0	0	0	0	0	0	0	0	0	0	0	0	0	0	0
	Blue(1)	0	0	0	0	0	0	0	0	0	0	0	0	0	0	0	0	0	1
	Blue(2)	0	0	0	0	0	0	0	0	0	0	0	0	0	0	0	0	1	0
	:	:	:	:	:	:	:	:	:	:	:	:	:	:	:	:	:	:	:
	:	:	:	:	:	:	:	:	:	:	:	:	:	:	:	:	:	:	:
	Blue(61)	0	0	0	0	0	0	0	0	0	0	0	0	1	1	1	1	0	1
	Blue(62)	0	0	0	0	0	0	0	0	0	0	0	0	1	1	1	1	1	0
	Blue(63)	0	0	0	0	0	0	0	0	0	0	0	0	1	1	1	1	1	1

Note (1) 0: Low Level Voltage, 1: High Level Voltage

6. INTERFACE TIMING

6.1 INPUT SIGNAL TIMING SPECIFICATIONS

The input signal timing specifications are shown as the following table and timing diagram.

Signal	Item	Symbol	Min.	Typ.	Max.	Unit	Note
DCLK	Frequency	Fc	57.5	64.9	74.4	MHz	
	Period	Tc	13.4	15.4	17.3	ns	
Vertical Active Display Term	Frame Rate	Fr	56	60	75	Hz	
	Total	Tv	774	806	848	Th	Tv=Tvd+Tvb
	Display	Tvd	768	768	768	Th	
	Blank	Tvb	Tv-Tvd	38	Tv-Tvd	Th	
Horizontal Active Display Term	Total	Th	1240	1344	1464	Tc	Th=Thd+Thb
	Display	Thd	1024	1024	1024	Tc	
	Blank	Thb	Th-Thd	320	Th-Thd	Tc	

Note：(1) Because this module is operated by DE only mode, Hsync and Vsync input signals should be set to low logic level or ground. Otherwise, this module would operate abnormally.

INPUT SIGNAL TIMING DIAGRAM

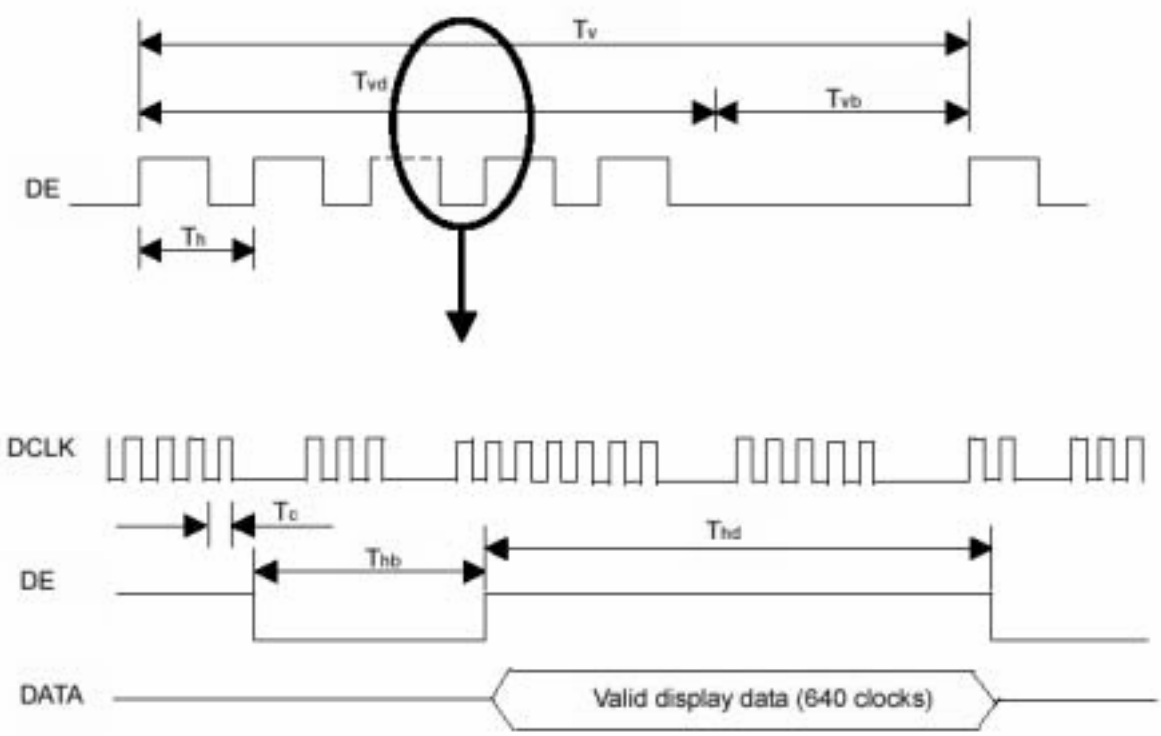

Product Specification

6.2 POWER ON/OFF SEQUENCE

To prevent a latch-up or DC operation of LCD module, the power on/off sequence should follow the conditions shown in the following diagram.

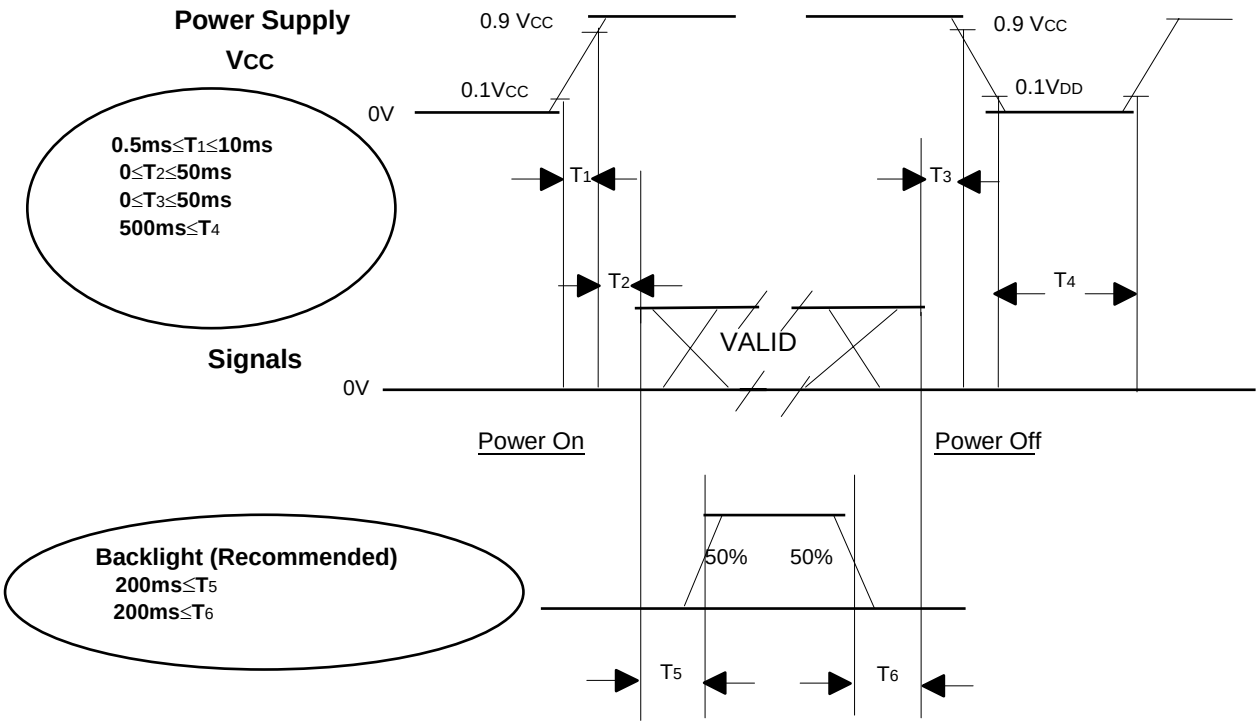

Power ON/OFF Sequence

Note (1) Please avoid floating state of interface signal at invalid period.

Note (2) When the interface signal is invalid, be sure to pull down the power supply of LCD Vcc to 0 V.

Note (3) The Backlight LED Driver power must be turned on after the power supply for the logic and the interface signal is valid. The Backlight LED Driver power must be turned off before the power supply for the logic and the interface signal is invalid.

7. OPTICAL CHARACTERISTICS

7.1 TEST CONDITIONS

Item	Symbol	Value	Unit
Ambient Temperature	Ta	25±2	℃
Ambient Humidity	Ha	50±10	%RH
Supply Voltage	V_{CC}	5.0	V
Input Signal	According to typical value in "3. ELECTRICAL CHARACTERISTICS"		
LED Driver Current	I_L	0.86	A

7.2 OPTICAL SPECIFICATIONS

The relative measurement methods of optical characteristics are shown in 7.2. The following items should be measured under the test conditions described in 7.1 and stable environment shown in Note (5).

Item		Symbol	Condition	Min.	Typ.	Max.	Unit	Note
Color Chromaticity	Red	Rx	θ_X=0°, θ_Y =0° CS-1000	Typ - 0.03	(0.595)	Typ + 0.03	-	(1), (5)
		Ry			(0.339)		-	
	Green	Gx			(0.317)		-	
		Gy			(0.531)		-	
	Blue	Bx			(0.152)		-	
		By			(0.123)		-	
	White	Wx			(0.308)		-	
		Wy			(0.318)		-	
Center Luminance of White		L_C		**(1000)**	-		-	(4), (5)
Contrast Ratio		CR		(500)	(700)		-	(2), (5)
Response Time		T_R	θ_X=0°, θ_Y =0°	-	(6)	(11)	ms	(3)
		T_F		-	(17)	(22)	ms	
White Variation		δW	θ_X=0°, θ_Y =0°	-	(1.25)	(1.4)	-	(5), (6)
Viewing Angle	Horizontal	θ_X+	CR≥10	(70)	(80)		Deg.	(1), (5)
		θ_X-		(70)	(80)			
	Vertical	θ_Y+		(70)	(80)			
		θ_Y-		(70)	(80)			

Product Specification

Note (1) Definition of Viewing Angle (θx, θy):

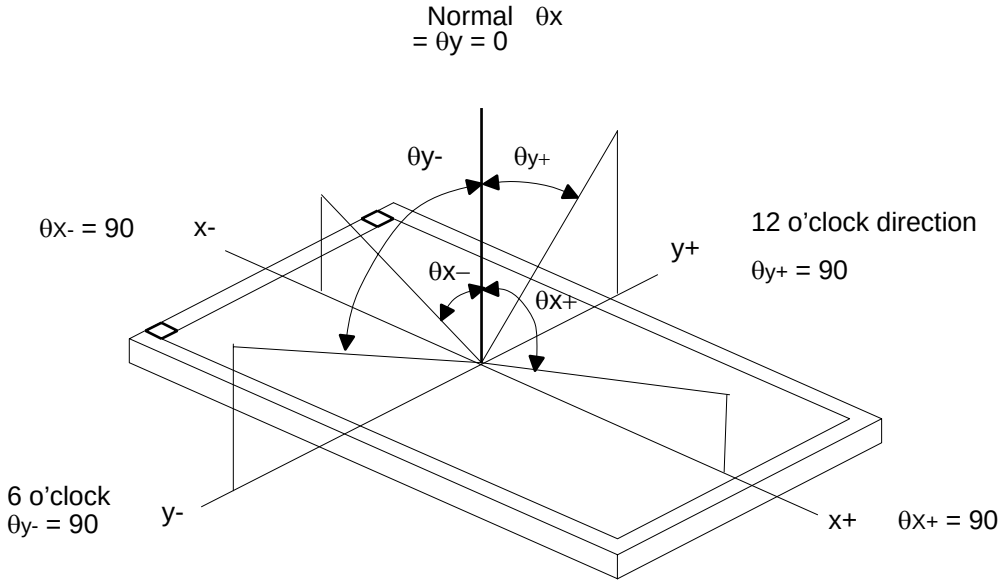

Note (2) Definition of Contrast Ratio (CR):

The contrast ratio can be calculated by the following expression.

Contrast Ratio (CR) = L63 / L0

L63: Luminance of gray level 63

L 0: Luminance of gray level 0

CR = CR (5)

CR (X) is corresponding to the Contrast Ratio of the point X at Figure in Note (6).

Note (3) Definition of Response Time (T_R, T_F) and measurement method:

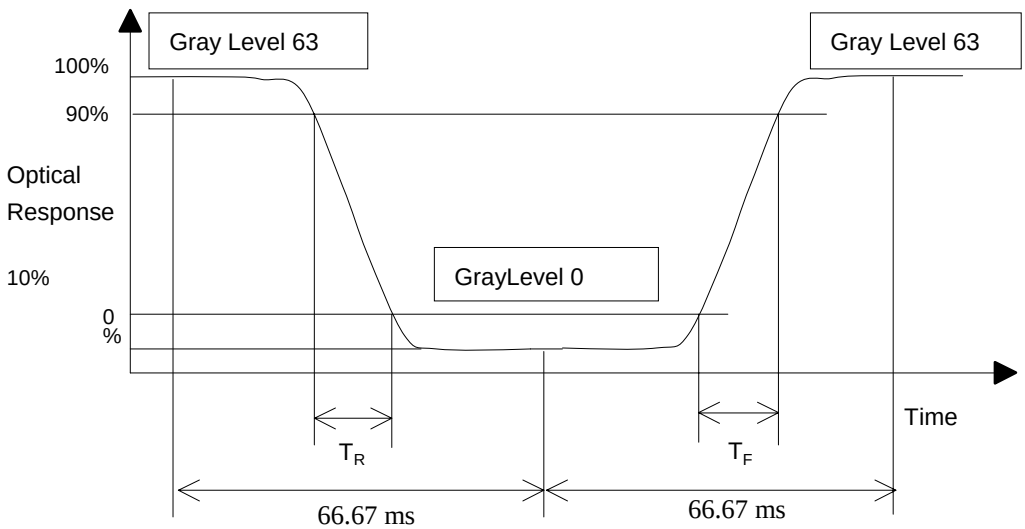

Note (4) Definition of Luminance of White (L_C):

Measure the luminance of gray level 63 at center point

L_C = L (5)

L (x) is corresponding to the luminance of the point X at Figure in Note (6).

Note (5) Measurement Setup:

The LCD module should be stabilized at given temperature for 20 minutes to avoid abrupt temperature change during measuring. In order to stabilize the luminance, the measurement should be executed after lighting Backlight for 20 minutes in a windless room.

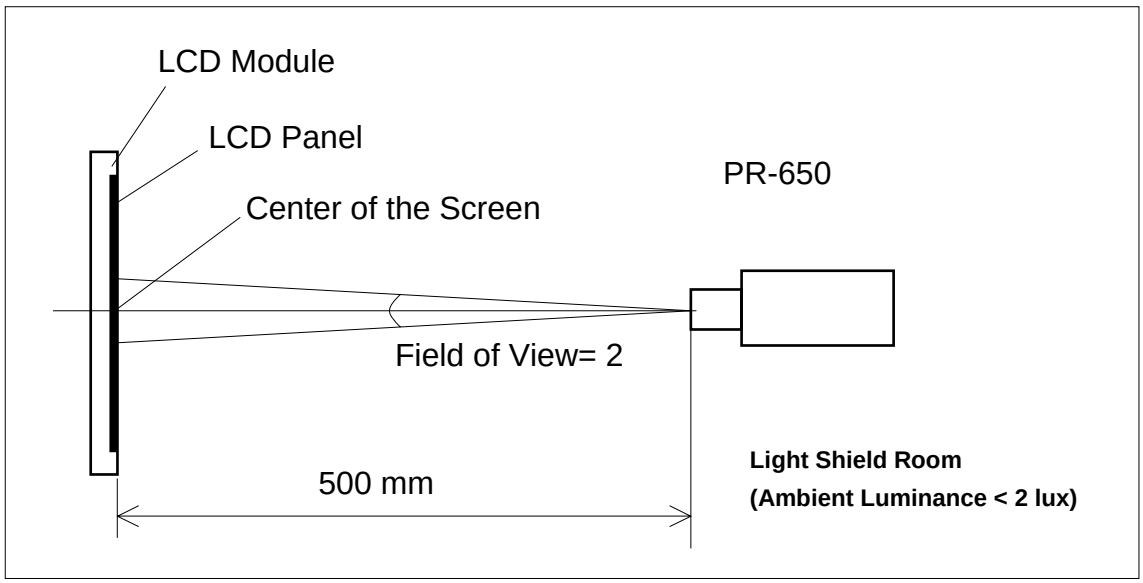

Product Specification

Note (6) Definition of White Variation (δW):

Measure the luminance of gray level 63 at 5 points

$$\delta W = \frac{\text{Maximum [L (1), L (2), L (3), L (4), L (5)]}}{\text{Minimum [L (1), L (2), L (3), L (4), L (5)]}}$$

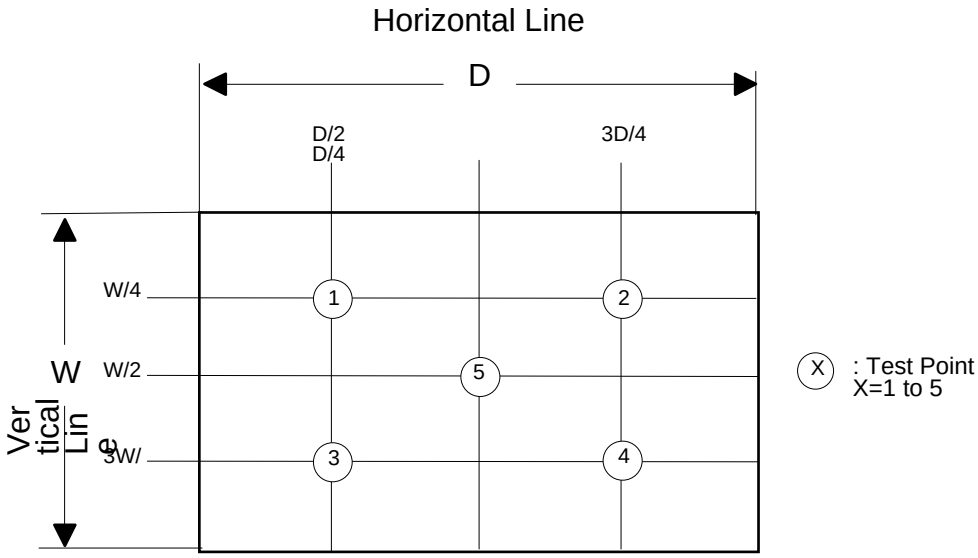

8. PACKAGING

8.1 PACKING SPECIFICATIONS

(1) 15pcs LCD modules / 1 Box

(2) Box dimensions: 461 (L) X 362 (W) X 314 (H) mm

(3) Weight: approximately 11.15Kg (15 modules per box)

8.2 PACKING METHOD

(1) Carton Packing should have no failure in the following reliability test items.

Test Item	Test Conditions	Note
Vibration	ISTA STANDARD Random, Frequency Range: 2 – 200 Hz Top & Bottom: 30 minutes (+Z), 10 min (-Z), Right & Left: 10 minutes (X) Back & Forth 10 minutes (Y)	Non Operation
Dropping Test	1 Angle, 3 Edge, 6 Face, 61 cm	Non Operation

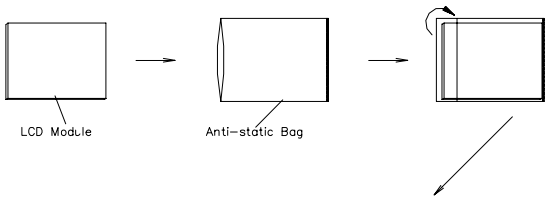

(1) 15pcs Modules/1 box

(2) Carton dimensions : 465(L)x362(W)x314(H)mm

(3) Weight : approximately 11.15kg(15 Module per box).

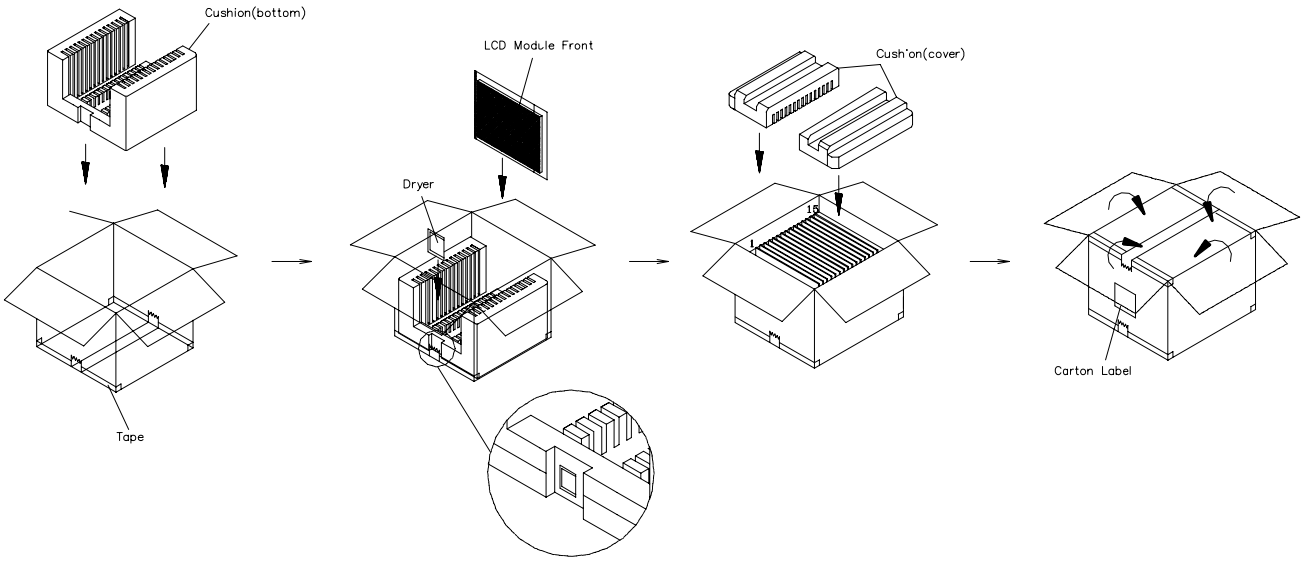

Figure. 8-1 Packing method

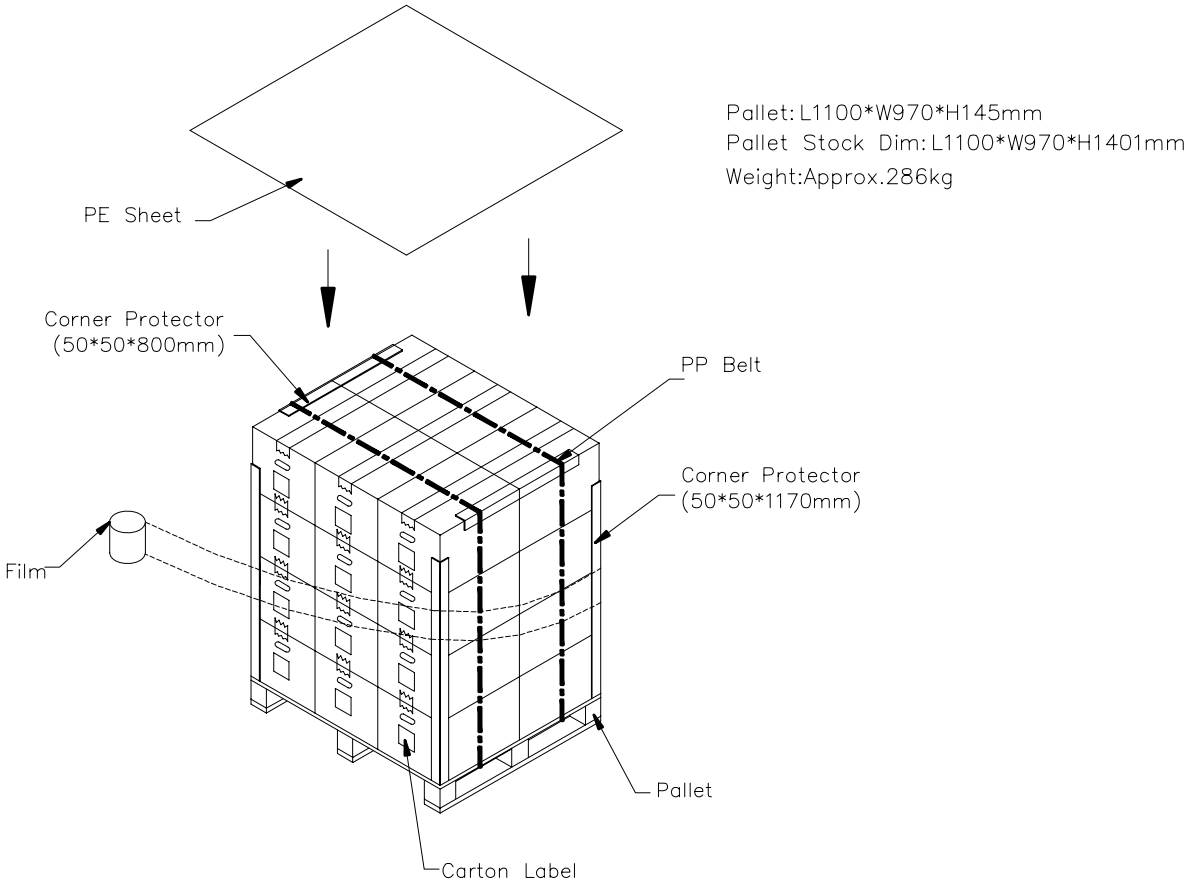

Figure. 8-2 Packing method

10. PRECAUTIONS

10.1 ASSEMBLY AND HANDLING PRECAUTIONS

(1) Do not apply rough force such as bending or twisting to the module during assembly.

(2) To assemble or install module into user's system can be only in clean working areas. The dust and oil may cause electrical short or worsen the polarizer.

(3) It's not permitted to have pressure or impulse on the module because the LCD panel and Backlight will be damaged.

(4) Always follow the correct power sequence when LCD module is connecting and operating. This can prevent damage to the CMOS LSI chips during latch-up.

(5) Do not pull the I/F connector in or out while the module is operating.

(6) Do not disassemble the module.

(7) Use a soft dry cloth without chemicals for cleaning, because the surface of polarizer is very soft and easily scratched.

(8) It is dangerous that moisture come into or contacted the LCD module, because moisture may damage LCD module when it is operating.

(9) High temperature or humidity may reduce the performance of module. Please store LCD module within the specified storage conditions.

(10) When ambient temperature is lower than 10 C may reduce the display quality. For example, the response time will become slowly, and the starting voltage of LED will be higher than room temperature.

10.2 SAFETY PRECAUTIONS

(1) The startup voltage of Backlight is approximately 1000 Volts. It may cause electrical shock while assembling with LED Driver. Do not disassemble the module or insert anything into the Backlight unit.

(2) If the liquid crystal material leaks from the panel, it should be kept away from the eyes or mouth. In case of contact with hands, skin or clothes, it has to be washed away thoroughly with soap.

(3) After the module's end of life, it is not harmful in case of normal operation and storage.

Product Specification

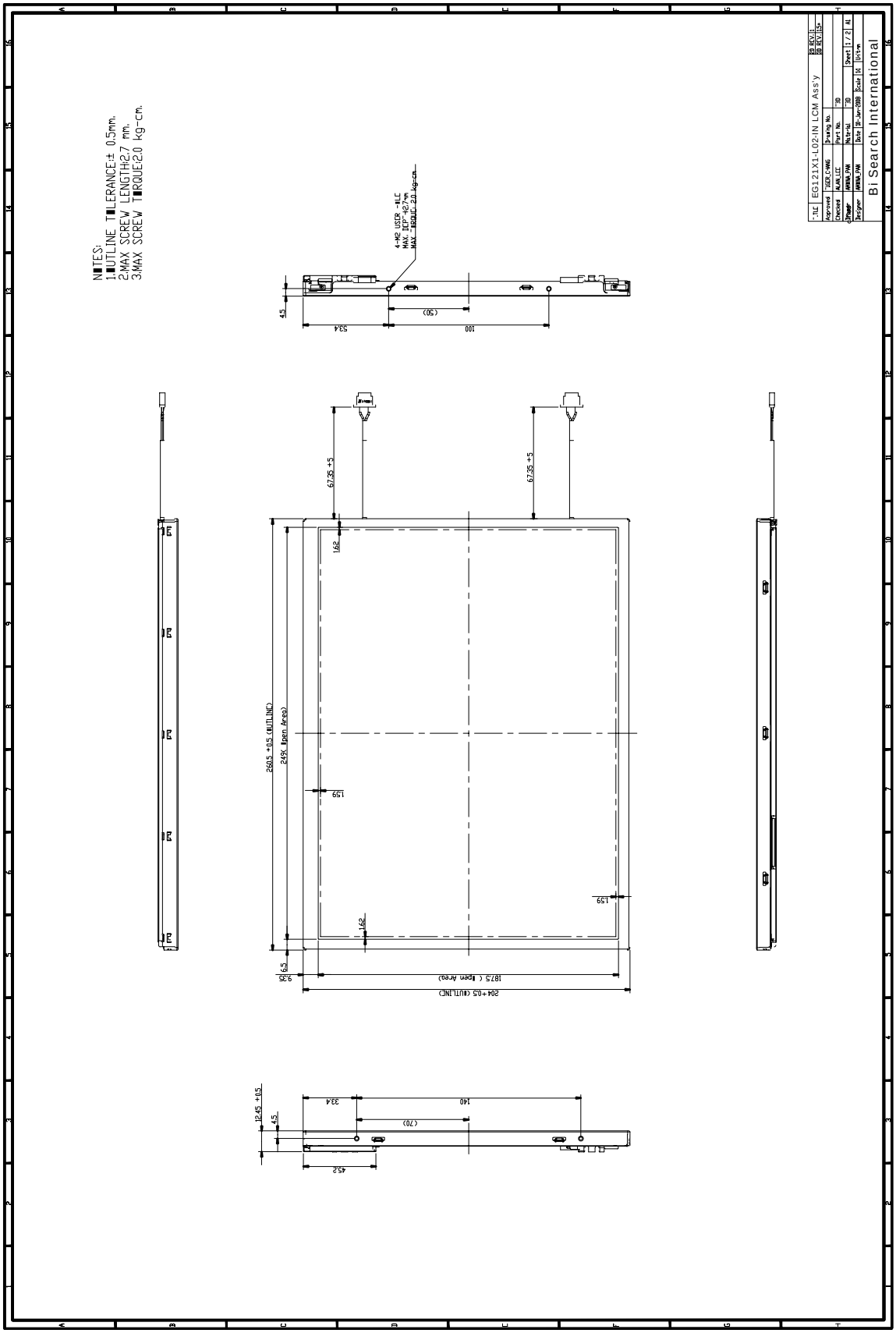

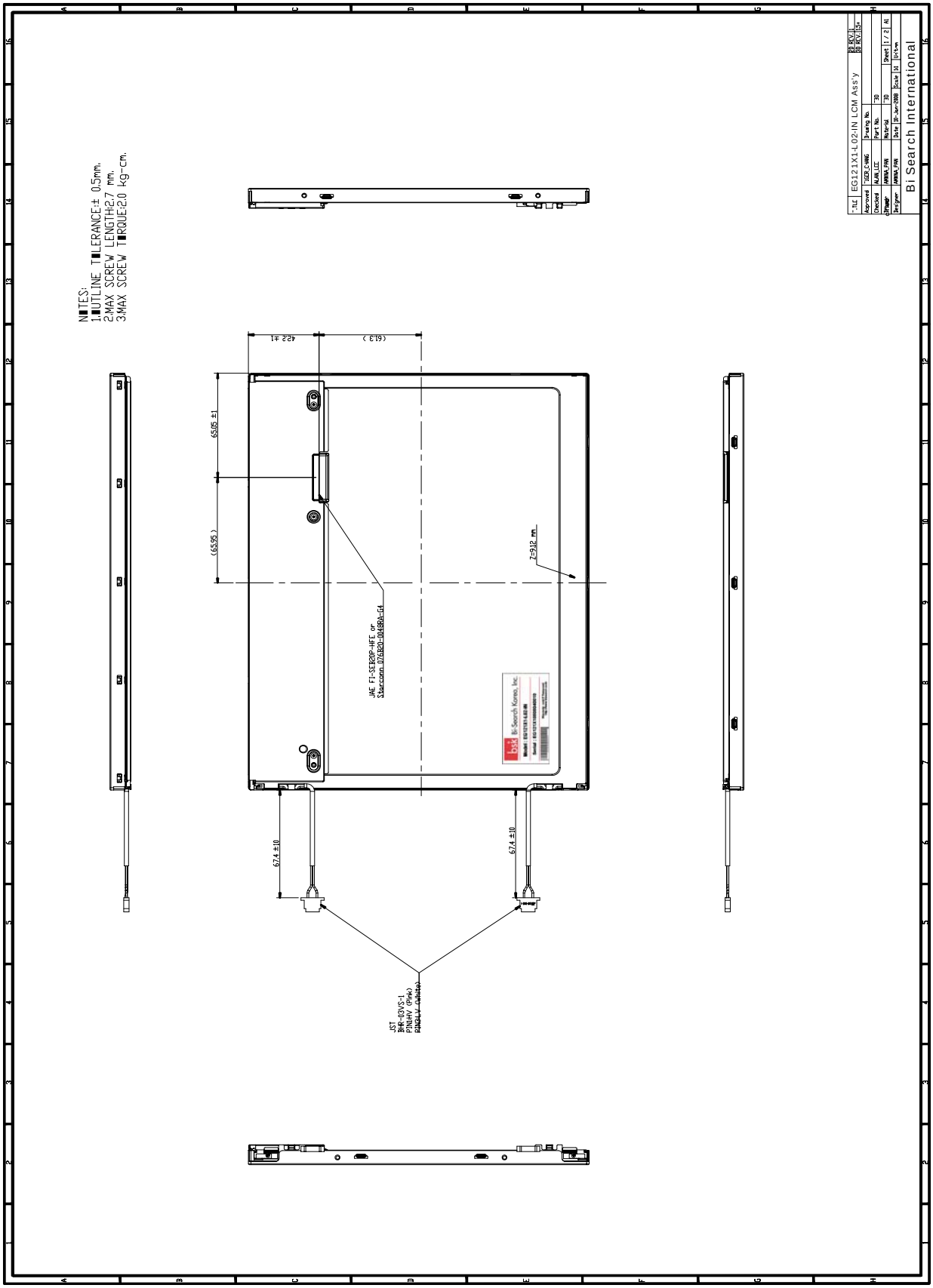
NOTES:
1.OUTLINE TOLERANCE:± 0.5mm.
2.MAX SCREW LENGTH:2.7 mm.
3.MAX SCREW TORQUE:2.0 kg-cm.
42.2 ±1
(61.3)
65.05 ±1
(65.95)
Z=3.2 mm
JAE FI-SE120P-HFE or
Starconn:DD8B2-30B6R0-G4
67.4 ±10
67.4 ±10
JST
BHR-03VS-1
P3NLHV (Pink)
P2NSLV (White)
Bi Search Korea, Inc.
Model: EG121X1-L02-THA
Serial: EG121X1-000000000000
Bi Search International
Title EG121X1-L02-IN LCM Ass'y
Approved SEER CHING
Checked ALAN LEE
Drawn HANNA PAN
Designer HANNA PAN
Drawing No. TBD
Part No. TBD
Material TBD
Date 19-Jan-2008
Scale 1X
Sheet 1 / 2
A1
Bi Search International