SmarterGlass

state-of-the-art display solutions

www.smarterglass.com
978 997 4104
sales@smarterglass.com

(V) Preliminary Specifications
( ) Final Specifications

Module	10.4 Inch Color TFT-LCD
Model Name	G104SN02 V2

Customer	**Date**	**Approved by**	**Date**
		Debbie Chiu	2009/02/11
Checked & Approved by		**Prepared by**	
		Vivian Huang	2009/02/11
Note: This Specification is subject to change without notice.		General Display Business Division / AU Optronics corporation	

Contents

1. Operating Precautions 4
2. General Description 5
2.1 Display Characteristics 5
2.2 Optical Characteristics 6
3. Functional Block Diagram 9
4. Absolute Maximum Ratings 9
4.1 Absolute Ratings of TFT LCD Module 9
4.2 Absolute Ratings of Environment 9
5. Electrical Characteristics 9
5.1 TFT LCD Module 9
5.2 Backlight Unit 9
6. Signal Characteristics 9
6.1 Pixel Format Image 9
6.2 Scanning Direction 9
6.3 TFT-LCD Interface Signal Description 9
6.4 The Input Data Format 9
6.5 TFT-LCD Interface Timing 9
6.6 Power ON/OFF Sequence 9
7. Connector & Pin Assignment 9
7.1 TFT-LCD Signal (CN1): LCD Connector 9
7.2 LED Backlight Unit (CN2): Backlight Connector 9
8. Reliability Test Criteria 9
9. Mechanical Characteristics 9
9.1 LCM Outline Dimension (Front View) 9
9.2 LCM Outline Dimension (Rear View) 9
10. Label and Packaging 9
10.1 Shipping Label (on the rear side of TFT-LCD display) 9
10.2 Carton Package 9
11 Safety 9
11.1 Sharp Edge Requirements 9
11.2 Materials 9
11.3 Capacitors 9
11.4 National Test Lab Requirement 9

Record of Revision

Version and Date	Page	Old description	New Description
0.0 2009/02/03	All	First Edition	

1. Operating Precautions

1) Since front polarizer is easily damaged, please be cautious and not to scratch it.
2) Be sure to turn off power supply when inserting or disconnecting from input connector.
3) Wipe off water drop immediately. Long contact with water may cause discoloration or spots.
4) When the panel surface is soiled, wipe it with absorbent cotton or soft cloth.
5) Since the panel is made of glass, it may be broken or cracked if dropped or bumped on hard surface.
6) To avoid ESD (Electro Static Discharde) damage, be sure to ground yourself before handling TFT-LCD Module.
7) Do not open nor modify the module assembly.
8) Do not press the reflector sheet at the back of the module to any direction.
9) In case if a module has to be put back into the packing container slot after it was taken out from the container, do not press the center of the LED light bar edge. Instead, press at the far ends of the LED light bar edge softly. Otherwise the TFT Module may be damaged.
10) At the insertion or removal of the Signal Interface Connector, be sure not to rotate nor tilt the Interface Connector of the TFT Module.
11) TFT-LCD Module is not allowed to be twisted & bent even force is added on module in a very short time. Please design your display product well to avoid external force applying to module by end-user directly.
12) Small amount of materials without flammability grade are used in the TFT-LCD module. The TFT-LCD module should be supplied by power complied with requirements of Limited Power Source (IEC60950 or UL1950), or be applied exemption.
13) Severe temperature condition may result in different luminance, response time and lamp ignition voltage.
14) Continuous operating TFT-LCD display under low temperature environment may accelerate lamp exhaustion and reduce luminance dramatically.
15) The data on this specification sheet is applicable when LCD module is placed in landscape position.
16) Continuous displaying fixed pattern may induce image sticking. It’s recommended to use screen saver or shuffle content periodically if fixed pattern is displayed on the screen.

2. General Description

This specification applies to the Color Active Matrix Liquid Crystal Display G104SN02 V2 composed of a TFT-LCD display, a driver and power supply circuit, and a LED backlight system.

The screen format is intended to support SVGA (800(H) x 600(V)) screen and 16.2M (RGB 8-bits) or 262k colors (RGB 6-bits).

LED driving board for backlight unit is included in G104SN02 V2 and the LED unit is replaceable.

All input signals are LVDS interface and compatible with G104SN02 V1.

G104SN02 V2 designed with wide viewing angle; wide temperature and long life LED backlight is well suited for industial applications.

G104SN02 V2 is a RoHS product.

2.1 Display Characteristics

The following items are characteristics summary on the table under 25 ℃ condition:

Items	Unit	Specifications
Screen Diagonal	[inch]	10.4
Active Area	[mm]	211.2 (H) x 158.4 (V)
Pixels H x V		800 x 3(RGB) x 600
Pixel Pitch	[mm]	0.264 x 0.264
Pixel Arrangement		R.G.B. Vertical Stripe
Display Mode		TN, Normally White
Nominal Input Voltage VDD	[Volt]	3.3 (typ.)
Typical Power Consumption	[Watt]	5.2W All black pattern
Weight	[Grams]	360(Typ.)
Physical Size	[mm]	243.0(H) x 184.0(V) x 8.0(D)(Typ.)
Electrical Interface		1 channel LVDS
Surface Treatment		Anti-glare, Hardness 3H
Support Color		16.2M / 262K colors
Temperature Range Operating Storage (Non-Operating)	 [^{o}C] [^{o}C]	 -30 to +85 -30 to +85
RoHS Compliance		RoHS Compliance

2.2 Optical Characteristics

The optical characteristics are measured under stable conditions at 25℃ (Room Temperature):

Item	Unit	Conditions	Min.	Typ.	Max.	Remark
White Luminance	[cd/m2]	I_F= 80mA/1 LED Line (center point)	300	400	-	Note 1
Uniformity	%	5 Points	75	-	-	Note 2, 3
Contrast Ratio			500	700	-	Note 4
Response Time	[msec]	Rising	-	10	20	Note 5
	[msec]	Falling	-	20	30	
	[msec]	Raising + Falling	-	30	50	
Viewing Angle	[degree] [degree]	Horizontal (Right) CR = 10 (Left)	70 70	80 80	- -	Note 6
	[degree] [degree]	Vertical (Upper) CR = 10 (Lower)	50 70	60 80	- -	
Color / Chromaticity Coordinates (CIE 1931)		Red x	TBD	TBD	TBD	
		Red y	TBD	TBD	TBD	
		Green x	TBD	TBD	TBD	
		Green y	TBD	TBD	TBD	
		Blue x	TBD	TBD	TBD	
		Blue y	TBD	TBD	TBD	
		White x	0.26	0.31	0.36	
		White y	0.28	0.33	0.38	
Color Gamut	%		-	45	-	

Note 1: Measurement method

Equipment Pattern Generator, Power Supply, Digital Voltmeter, Luminance meter (SR_3 or equivalent)

Aperture 1° with 50cm viewing distance

Test Point Center

Environment < 1 *lux*

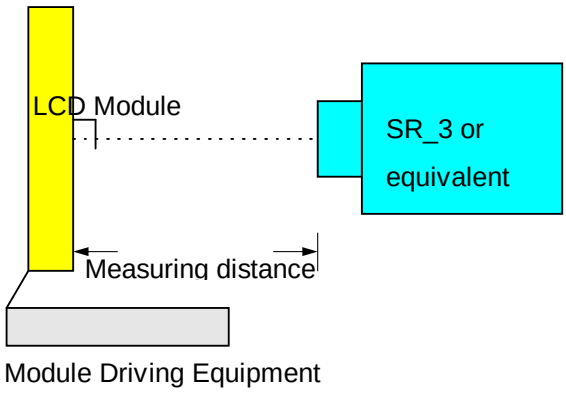

Note 2: Definition of 5 points position (Display active area: 211.2mm (H) x 158.4mm (V))

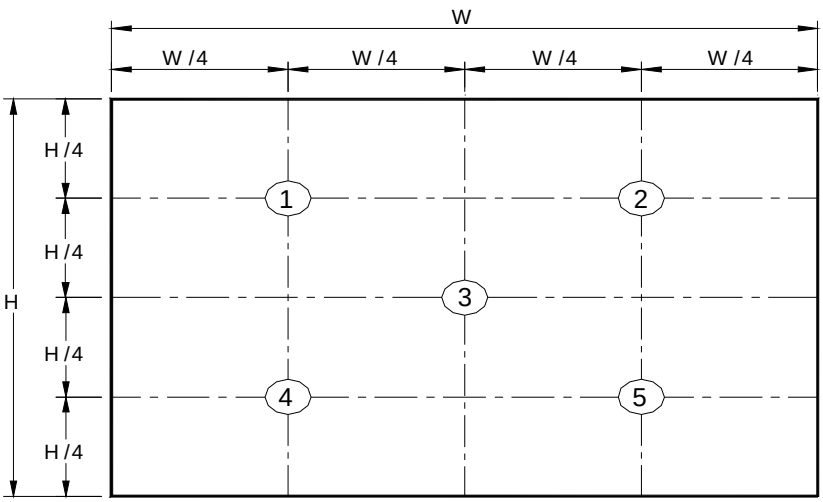

Note 3: The luminance uniformity of 5 points is defined by dividing the minimum luminance values by the maximum test point luminance

$$\delta_{W9} = \frac{\text{Minimum Brightness of five points}}{\text{Maximum Brightness of five points}}$$

Note 4: Definition of contrast ratio (CR):

$$\text{Contrast ratio (CR)} = \frac{\text{Brightness on the “White” state}}{\text{Brightness on the “Black” state}}$$

Note 5: Definition of response time:

The output signals of photo detector are measured when the input signals are changed from “White” to “Black” (falling time) and from “Black” to “White” (rising time), respectively. The response time interval is between 10% and 90% of amplitudes. Please refer to the figure as below.

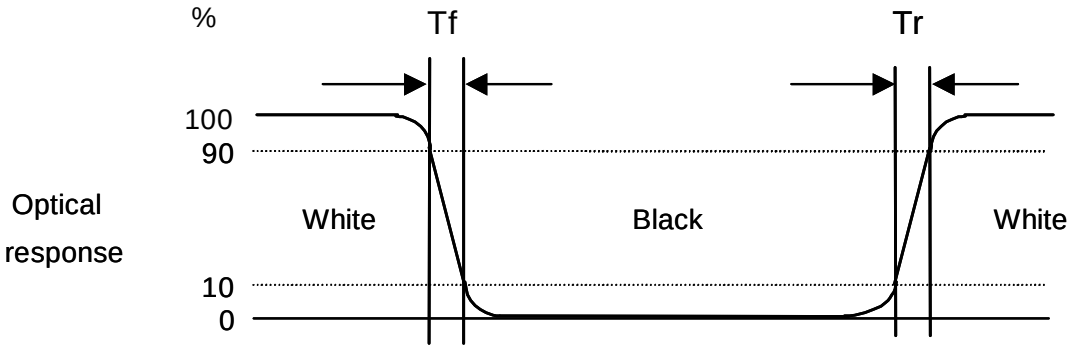

Note 6: Definition of viewing angle

Viewing angle is the measurement of contrast ratio ≧10, at the screen center, over a 180° horizontal and 180° vertical range (off-normal viewing angles). The 180° viewing angle range is broken down as below: 90° (θ) horizontal left and right, and 90° (Φ) vertical high (up) and low (down). The measurement direction is typically perpendicular to the display surface with the screen rotated to its center to develop

the desired measurement viewing angle.

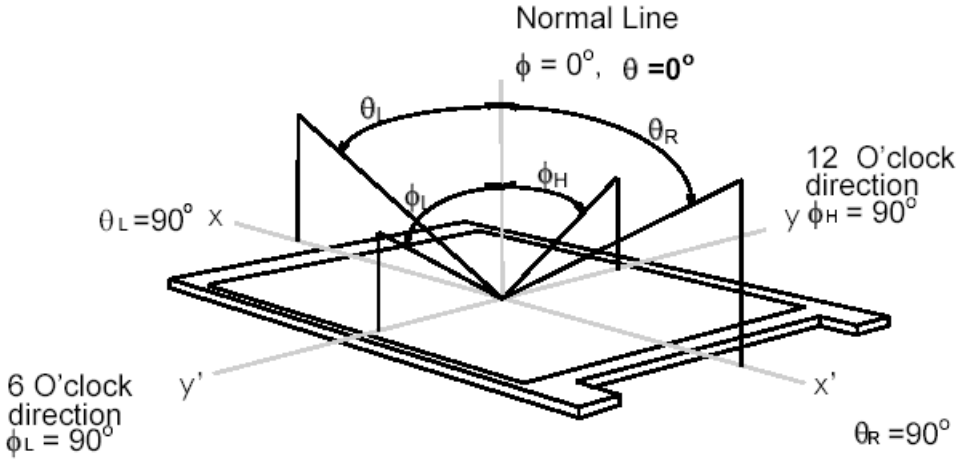

3. Functional Block Diagram

The following diagram shows the functional block of the 10.4 inch color TFT/LCD module:

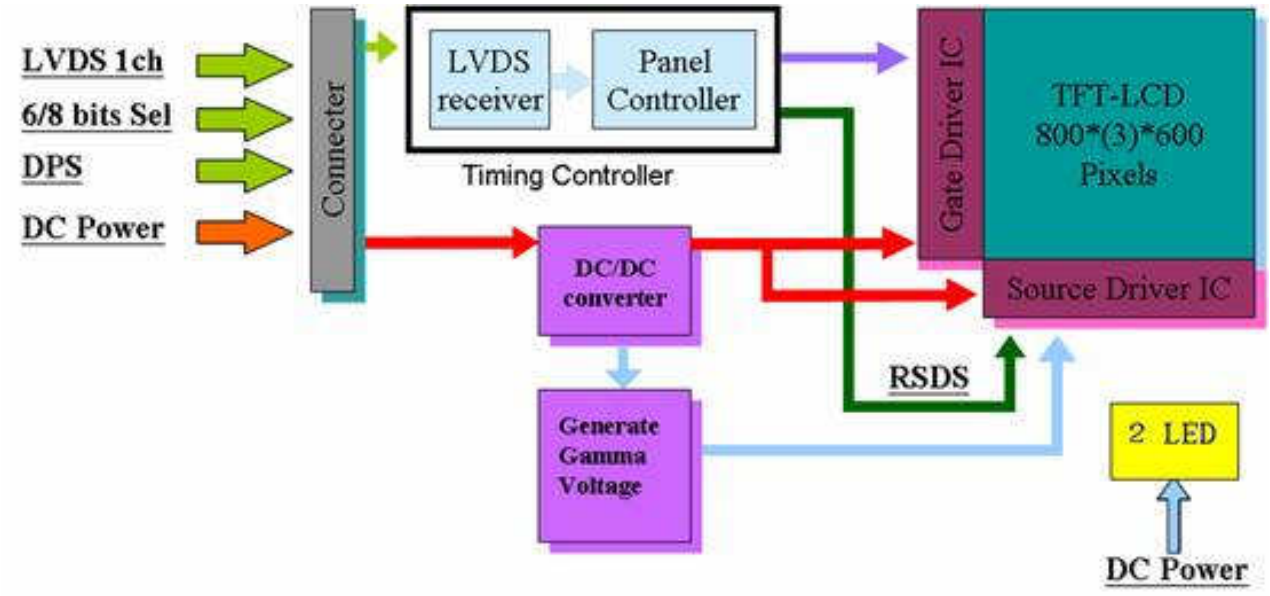

4. Absolute Maximum Ratings

4.1 Absolute Ratings of TFT LCD Module

Item	Symbol	Min	Max	Unit
Logic/LCD Drive	Vin	-0.3	+4.0	[Volt]

4.2 Absolute Ratings of Environment

Item	Symbol	Min	Max	Unit
Operating Temperature	TOP	-30	+85	[^{o}C]
Operation Humidity	HOP	5	95	[%RH]
Storage Temperature	TST	-30	+85	[^{o}C]
Storage Humidity	HST	5	95	[%RH]

Note: Maximum Wet-Bulb should be 39℃ and no condensation.

5. Electrical Characteristics

5.1 TFT LCD Module

5.1.1 Power Specification

Symbol	Parameter	Min	Typ	Max	Units	Remark
VDD	Logic/LCD Input Voltage	3.0	3.3	3.6	[Volt]	
I_{VDD}	LCD Input Current	-	280	–	[mA]	VDD=3.3V at 60 HZ, all Black Pattern
P_{VDD}	LCD Power comsumption	-	0.924	–	[Watt]	VDD=3.3V at 60 HZ, all Black Pattern
$I_{rush\ LCD}$	LCD Inrush Current	-	-	1.5	[A]	Note 1; VDD=3.3V Black Pattern, Rising time=470us
VDD_{rp}	Allowable Logic/LCD Drive Ripple Voltage	-	–	100	[mV] p-p	VDD=3.3V at 60 HZ, all Black Pattern

Note 1: Measurement condition:

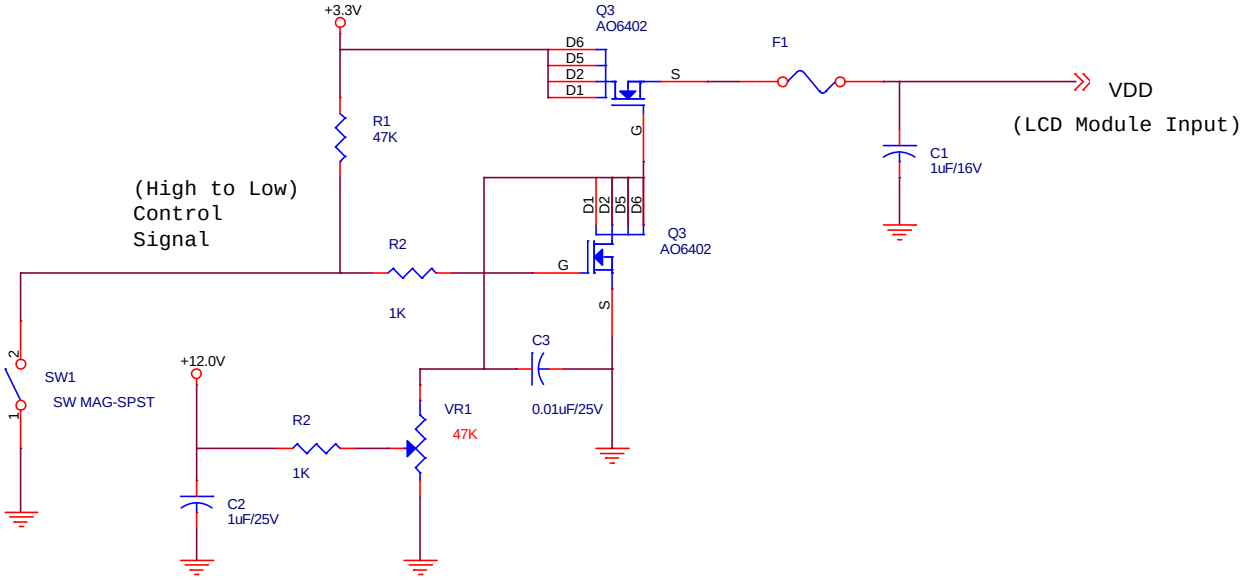

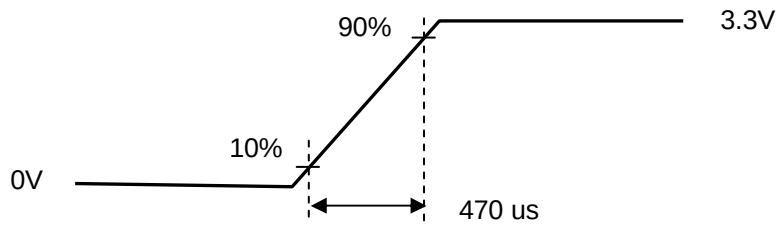

VDD rising time

5.1.2 Signal Electrical Characteristics

Input signals shall be low or Hi-Z state when VDD is off.

Symbol	Item	Min.	Typ.	Max.	Unit	Remark
VTH	Differential Input High Threshold	-	-	100	[mV]	VCM=1.2V
VTL	Differential Input Low Threshold	100	-	-	[mV]	VCM=1.2V
| VID |	Input Differential Voltage	100	400	600	[mV]	
VICM	Differential Input Common Mode Voltage	1.1	-	1.45	[V]	VTH/VTL=+-100mV

Note: LVDS Signal Waveform.

Single-end Signal

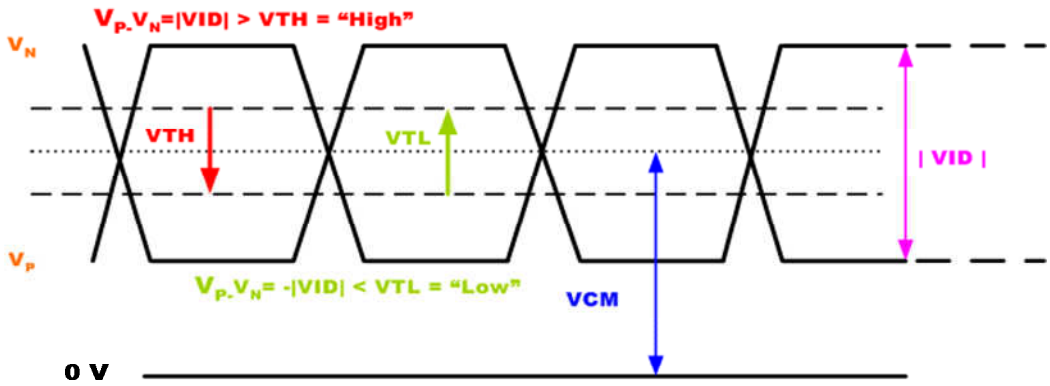

Differential Signal

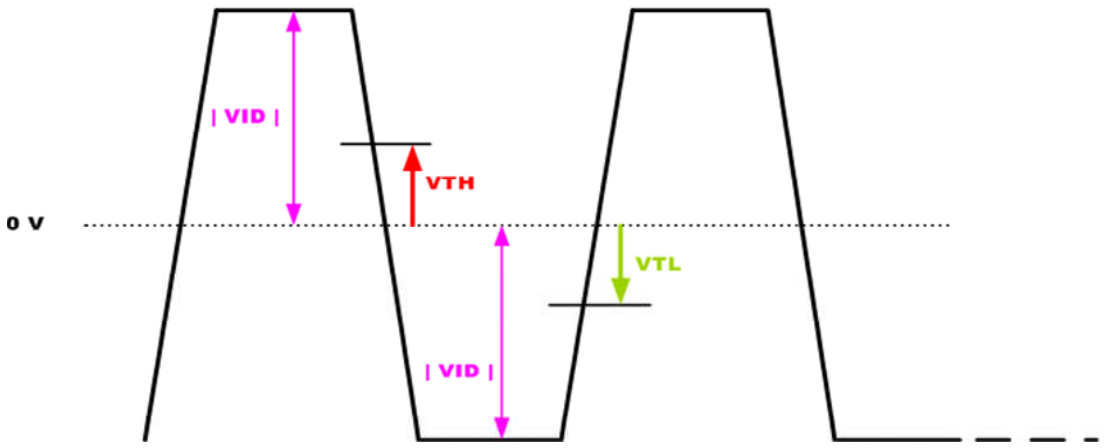

5.2 Backlight Unit

5.2.1 Parameter guideline for LED backlight

Following characteristics are measured under a stable condition using a inverter at 25℃. (Room Temperature):

Symbol	Parameter	Min.	Typ.	Max.	Unit	Remark
VCC	Input Voltage	10.8	12	12.6	[Volt]	
I_{VCC}	Input Current	-	0.35	-	[A]	100% PWM Duty
P_{VCC}	Power Consumption	-	4.2	TBD	[Watt]	100% PWM Duty
$I_{rush\ LED}$	Inrush Current	-	-	TBD	[A]	at rising time=470us
F_{PWM}	Dimming Frequency	200	-	20K	[Hz]	
	Swing Voltage	3	3.3	5.5	[Volt]	
	Dimmung duty cycle	TBD	-	100	%	
Operation Life		50,000	-	-	Hrs	I_F=80mA, Ta= 25°C

Note 1: Ta means ambient temperature of TFT-LCD module.

Note 2: I_F means LED unit forward current.

Note 3: VCC, I_{VCC}, $I_{rush\ LED}$, P_{VCC} are defined for LED backlight.(100% duty of PWM dimming)

Note 4: If G104SN02 V2 module is driven by high current or at high ambient temperature & humidity condition. The operating life will be reduced.

Note 5: Operating life means brightness goes down to 50% initial brightness. Minimum operating life time is estimated data.

6. Signal Characteristics

6.1 Pixel Format Image

Following figure shows the relationship between input signal and LCD pixel format.

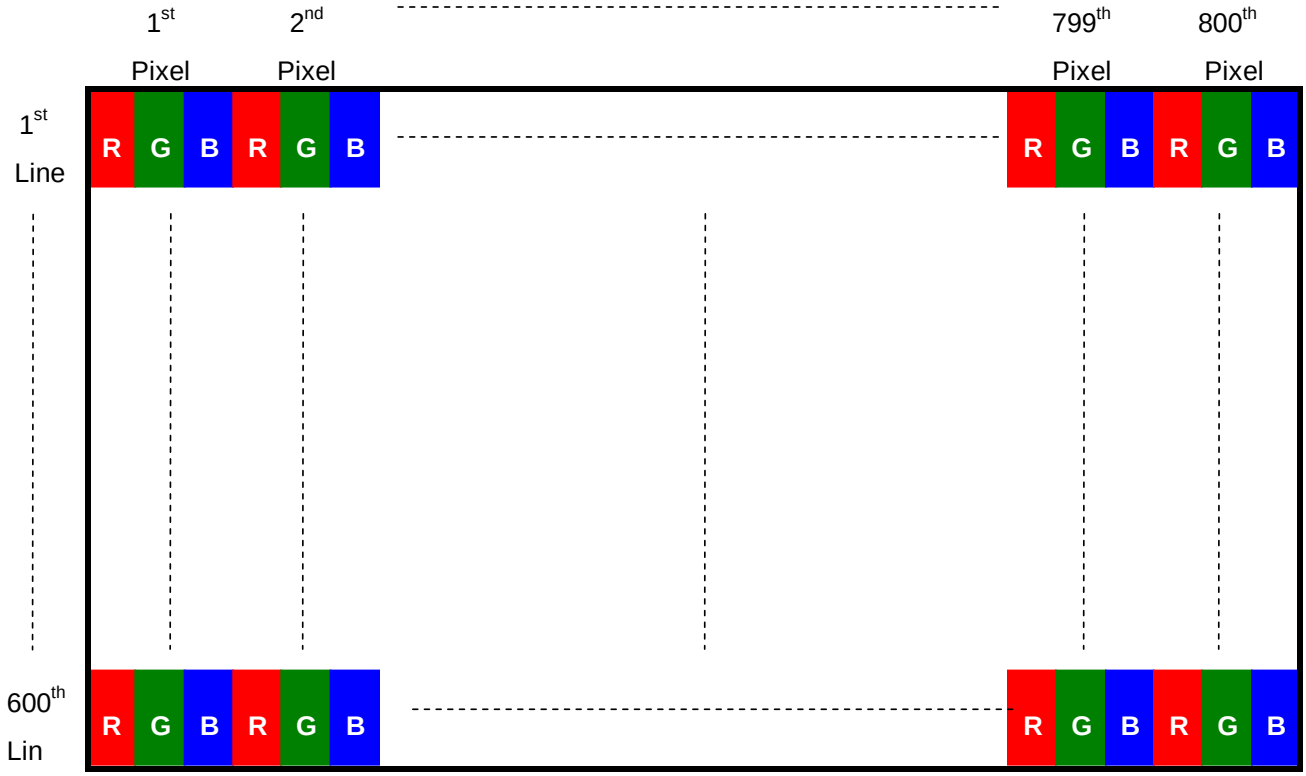

6.2 Scanning Direction

The following figures show the image seen from the front view. The arrow indicates the direction of scan.

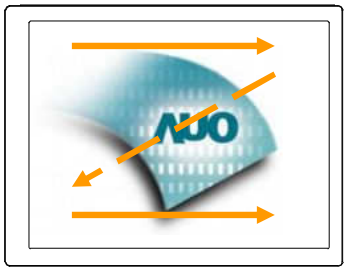

Fig. 1 Normal scan (Pin19, RSV = Low or NC)

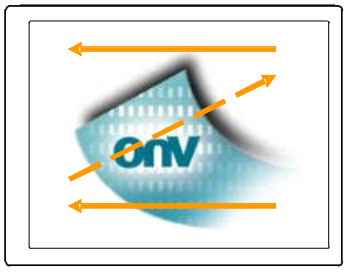

Fig. 2 Reverse scan (Pin19, RSV = High)

6.3 TFT-LCD Interface Signal Description

The module using a LVDS receiver embaded in AUO's ASIC. LVDS is a differential signal technology for LCD interface and a high-speed data transfer device.

Input Signal Interface		
Pin No.	**Symbol**	**Description**
1	VDD	Power Supply, 3.3V (typical)
2	VDD	Power Supply, 3.3V (typical)
3	GND	Ground
4	DPS	Reverse Scan Function [H: Enable; L/NC: Disable]
5	RxIN0-	LVDS receiver signal channel 0
6	RxIN0+	LVDS Differential Data Input (R0, R1, R2, R3, R4, R5, G0)
7	GND	Ground
8	RxIN1-	LVDS receiver signal channel 1
9	RxIN1+	LVDS Differential Data Input (G1, G2, G3, G4, G5, B0, B1)
10	GND	Ground
11	RxIN2-	LVDS receiver signal channel 2
12	RxIN2+	LVDS Differential Data Input (B2, B3, B4, B5, DE)
13	GND	Ground
14	RxCLKIN-	LVDS receiver signal clock
15	RxCLKIN+	
16	GND	Ground
17	RxIN3-	LVDS receiver signal channel 3, NC for 6 bit LVDS Input
18	RxIN3+	LVDS Differential Data Input (R6, R7, G6, G7, B6, B7, RSV)
19	RSV	Reserved for AUO internal test. Please treat it as NC.
20	SEL68	6/8bits LVDS data input selection [H: 8bits L/NC: 6bit]

Note 1: Input Signals shall be in low status when VDD is off.
Note 2: High stands for "3.3V", Low stands for "0V", NC stands for "No Connection".
Note 3: RSV stands for "Reserved".

6.4 The Input Data Format

6.4.1 SEL68

SEL68 =“Low” or “NC” for 6 bits LVDS Input

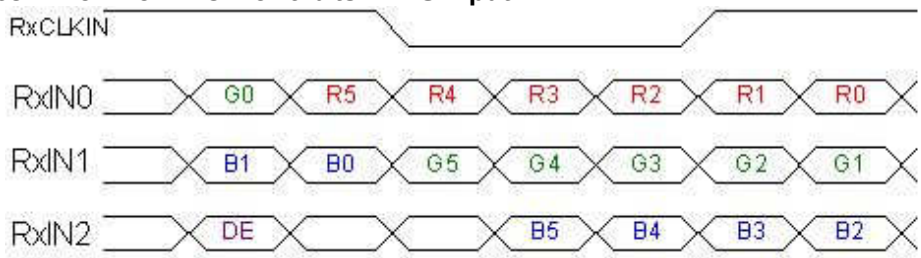

SEL68 = “High” for 8 bits LVDS Input

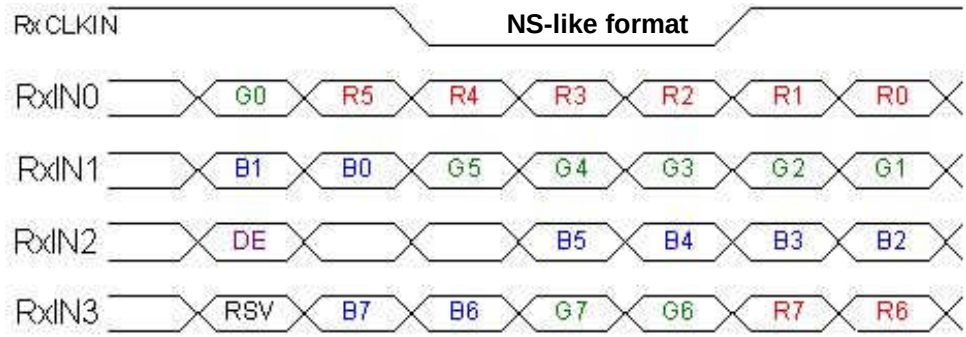

Note1: Please follow PSWG.
Note2: R/G/B data 7:MSB, R/G/B data 0:LSB

Signal Name	Description	Remark
R7 R6 R5 R4 R3 R2 R1 R0	Red Data 7 Red Data 6 Red Data 5 Red Data 4 Red Data 3 Red Data 2 Red Data 1 Red Data 0	Red-pixel Data For 8Bits LVDS input MSB: R7 ; LSB: R0 For 6Bits LVDS input MSB: R5 ; LSB: R0
G7 G6 G5 G4 G3 G2 G1 G0	Green Data 7 Green Data 6 Green Data 5 Green Data 4 Green Data 3 Green Data 2 Green Data 1 Green Data 0	Green-pixel Data For 8Bits LVDS input MSB: G7 ; LSB: G0 For 6Bits LVDS input MSB: G5 ; LSB: G0
B7 B6 B5 B4 B3 B2 B1 B0	Blue Data 7 Blue Data 6 Blue Data 5 Blue Data 4 Blue Data 3 Blue Data 2 Blue Data 1 Blue Data 0	Blue-pixel Data For 8Bits LVDS input MSB: B7 ; LSB: B0 For 6Bits LVDS input MSB: B5 ; LSB: B0
RxCLKIN	LVDS Data Clock	
DE	Data Enable Signal	When the signal is high, the pixel data shall be valid to be displayed.

Note: Output signals from any system shall be low or Hi-Z state when VDD is off.

6.5 TFT-LCD Interface Timing

6.5.1 Timing Characteristics

Signal		Symbol	Min.	Typ.	Max.	Unit
Clock Frequency		1/ T_{Clock}	30	40	50	MHz
Vertical Section	Period	T_V	608	628	1024	T_{Line}
	Active	T_{VD}	--	600	--	
	Blanking	T_{VB}	8	28	424	
Horizontal Section	Period	T_H	960	1056	1060	T_{Clock}
	Active	T_{HD}	--	800	--	
	Blanking	T_{HB}	160	256	260	

Note 1: Frame rate is 60 Hz.
Note 2: DE mode.

6.5.2 Input Timing Diagram

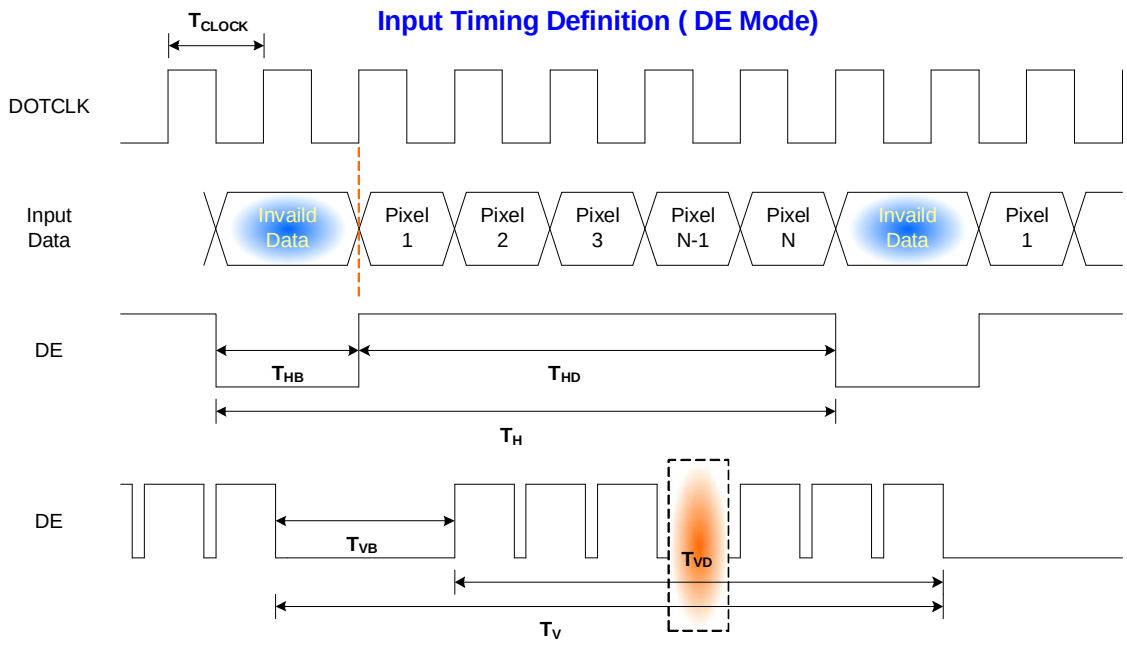

6.6 Power ON/OFF Sequence

VDD power and lamp on/off sequence is as below. Interface signals are also shown in the chart. Signals from any system shall be Hi-Z state or low level when VDD is off.

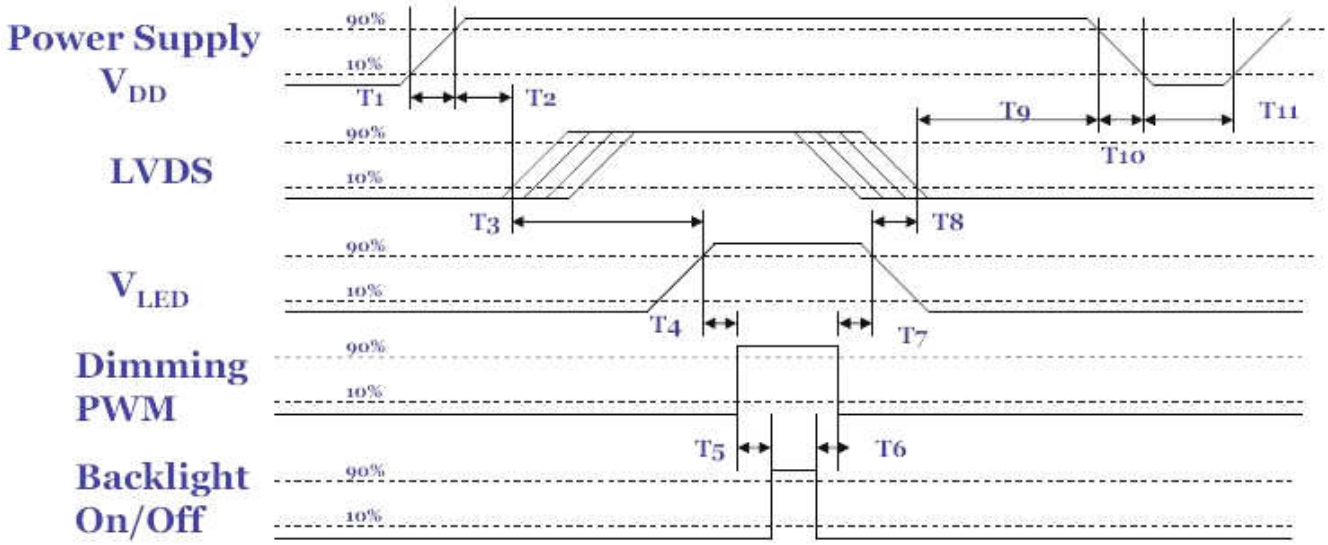

Power ON/OFF sequence timing

Parameter	Value			Units
	Min.	Typ.	Max.	
T1	0.5	-	10	[ms]
T2	30	40	50	[ms]
T3	200	-	-	[ms]
T4	10	-	-	[ms]
T5	10	-	-	[ms]
T6	0	-	-	[ms]
T7	10	-	-	[ms]
T8	100	-	-	[ms]
T9	0	16	50	[ms]
T10	-	-	10	[ms]
T11	1000	-	-	[ms]

The above on/off sequence should be applied to avoid abnormal function in the display. Please make sure to turn off the power when you plug the cable into the input connector or pull the cable out of the connector.

7. Connector & Pin Assignment

Physical interface is described as for the connector on module. These connectors are capable of accommodating the following signals and will be following components.

7.1 TFT-LCD Signal (CN1): LVDS Connector

Connector Name / Designation	**Signal Connector**
Manufacturer	STM or compatible
Connector Model Number	MSB24013P20HA or compatible
Adaptable Plug	P24013P20 or compatible

Pin No.	**Symbol**	**Pin No.**	**Symbol**
1	VDD	2	VDD
3	GND	4	DPS
5	RxIN0-	6	RxIN0+
7	GND	8	RxIN1-
9	RxIN1+	10	GND
11	RxIN2-	12	RxIN2+
13	GND	14	RxCKIN-
15	RxCKIN+	16	GND
17	RxIN3-	18	RxIN3+
19	RSV	20	SEL68

7.2 LED Backlight Unit (CN2): Driver Connector

Connector Name / Designation	**Lamp Connector**
Manufacturer	ENTERY or compatible
Connector Model Number	3808K-F05N-02R or compatible
Mating Model Number	H208K–P05N-02B or compatible

Pin No.	**symbol**	**description**
Pin1	VCC	12V input
Pin2	GND	GND
Pin3	On/OFF	5V-ON,0V-OFF
Pin4	Dimming	PWM
Pin5	NA	

8. Reliability Test Criteria

Items	Required Condition	Note
Temperature Humidity Bias	40℃, 90%RH, 300 hours	
High Temperature Operation	85℃, 300 hours	
Low Temperature Operation	-30℃, 300 hours	
Hot Storage	85℃, 300 hours	
Cold Storage	-30℃, 300 hours	
Thermal Shock Test	-20℃/ 30 min, 60℃/ 30 min, 100cycles, 40℃ minimun ramp rate	
Hot Start Test	85℃/ 1Hr min. power on/off per 5 minutes, 5 times	
Cold Start Test	-30℃/ 1Hr min. power on/off per 5 minutes, 5 times	
Shock Test (Non-Operating)	50G, 20ms, Half-sine wave, (±X, ±Y, ±Z)	
Vibration Test (Non-Operating)	1.5G, (10~200Hz, Sine wave) 30 mins/axis, 3 direction (X, Y, Z)	
On/off test	On/10 sec, Off/10 sec, 30,000 cycles	
ESD	Contact Discharge: ± 8KV, 150pF(330Ω) 1sec, 8 points, 25 times/ point Air Discharge: ± 15KV, 150pF(330Ω) 1sec, 8 points, 25 times/ point	Note 1
EMI	30-230 MHz, limit 40 dBu V/m, 230-1000 MHz, limit 47 dBu V/m	

Note1: According to EN61000-4-2, ESD class B: Some performance degradation allowed. No data lost Self-recoverable. No hardware failures.

Note2:

- Water condensation is not allowed for each test items.
- Each test is done by new TFT-LCD module. Don't use the same TFT-LCD module repeatedly for reliability test.
- The reliability test is performed only to examine the TFT-LCD module capability.
- To inspect TFT-LCD module after reliability test, please store it at room temperature and room humidity for 24 hours at least in advance.

9. Mechanical Characteristics

9.1 LCM Outline Dimension (Front View)

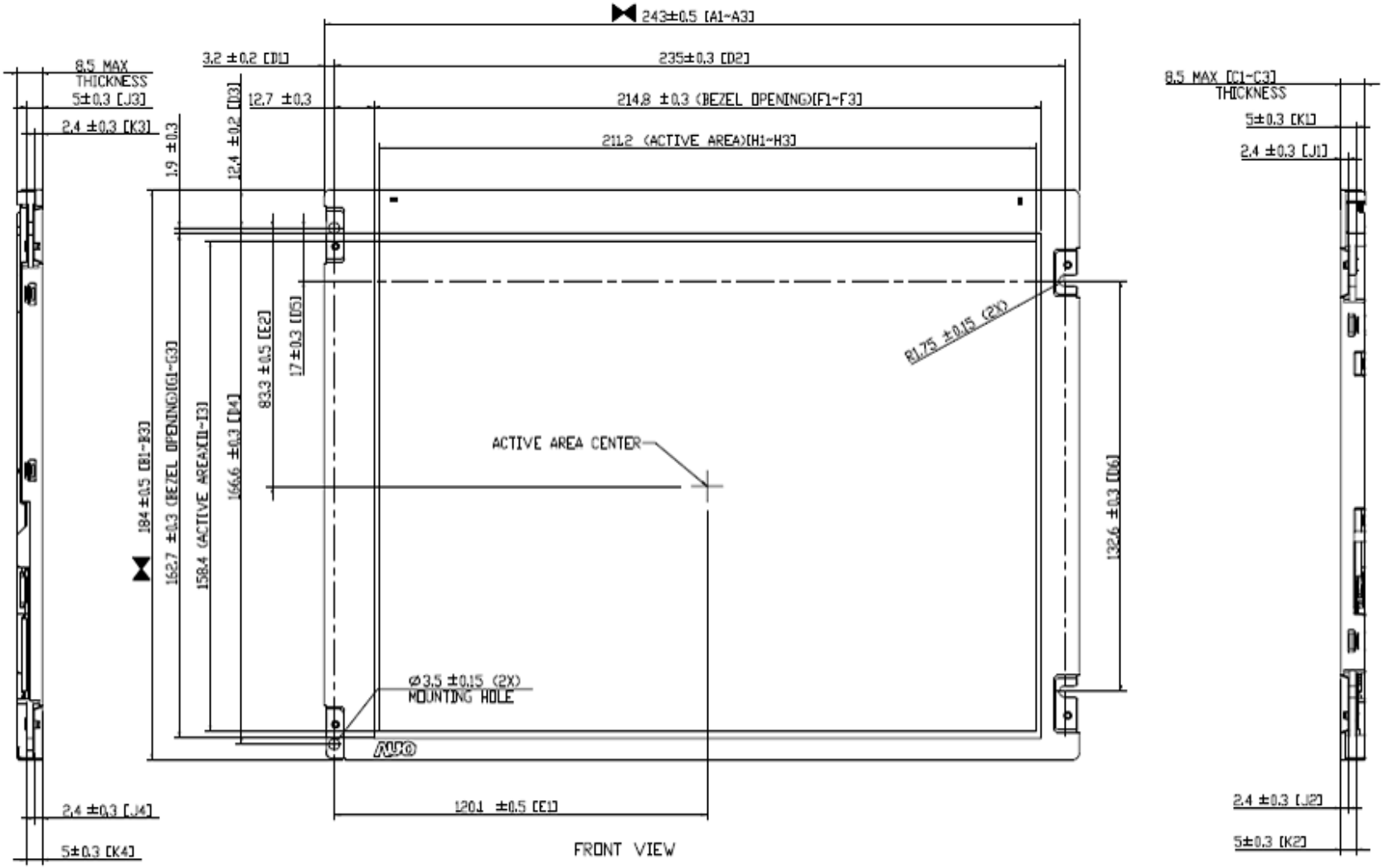

9.2 LCM Outline Dimension (Rear View)

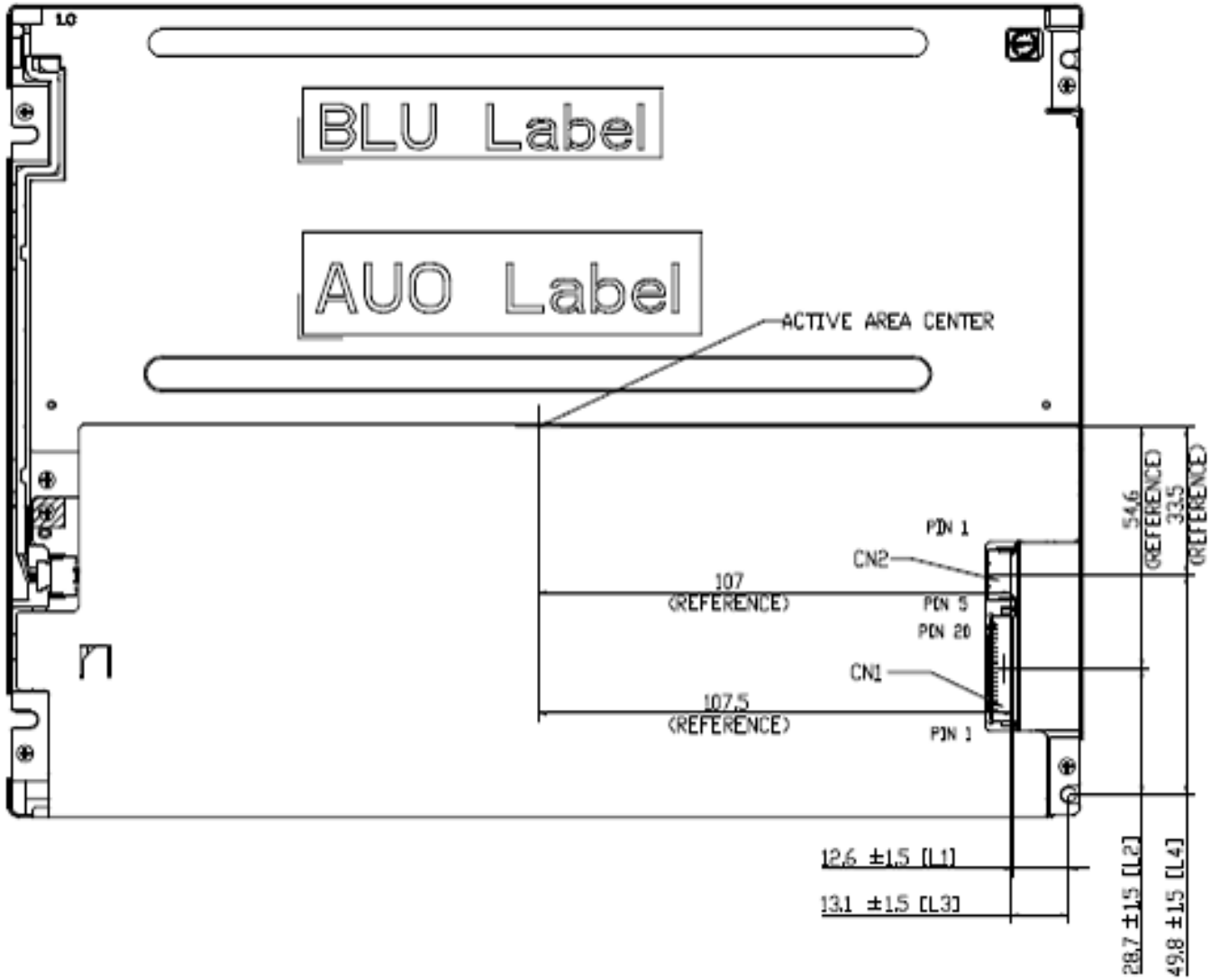

10. Label and Packaging

10.1 Shipping Label (on the rear side of TFT-LCD display)

10.2 Carton Package

11 Safety

11.1 Sharp Edge Requirements

There will be no sharp edges or comers on the display assembly that could cause injury.

11.2 Materials

11.2.1 Toxicity

There will be no carcinogenic materials used anywhere in the display module. If toxic materials are used, they will be reviewed and approved by the responsible AUO toxicologist.

11.2.2 Flammability

All components including electrical components that do not meet the flammability grade UL94-V1 in the module will complete the flammability rating exception approval process.

The printed circuit board will be made from material rated 94-V1 or better. The actual UL flammability rating will be printed on the printed circuit board.

11.3 Capacitors

If any polarized capacitors are used in the display assembly, provisions will be made to keep them from being inserted backwards.

11.4 National Test Lab Requirement

The display module will satisfy all requirements for compliance to:

UL 60950	U.S.A. Information Technology Equipment