SmarterGlass

state-of-the-art display solutions

www.smarterglass.com
978 997 4104
sales@smarterglass.com

SPECIFICATION
FOR
APPROVAL

(◆) **Preliminary Specification**
( ) **Final Specification**

Title	10.1” WSVGA TFT LCD

Customer	
MODEL	

SUPPLIER	LG Display Co., Ltd.
*MODEL	LP101WS1
Suffix	TLA2

*When you obtain standard approval,
please use the above model name without suffix

APPROVED BY	SIGNATURE
/	
/	
/	

Please return 1 copy for your confirmation with your signature and comments.

APPROVED BY	SIGNATURE
G. J. Kwon/ Manager	
REVIEWED BY	
C. J. Jun / Manager	
PREPARED BY	
P. A. Choi / Engineer	

Products Engineering Dept.
LG Display Co., Ltd

Contents

No	ITEM	Page
	COVER	1
	CONTENTS	2
	RECORD OF REVISIONS	3
1	GENERAL DESCRIPTION	4
2	ABSOLUTE MAXIMUM RATINGS	5
3	ELECTRICAL SPECIFICATIONS	
3-1	ELECTRICAL CHARACTREISTICS	6
3-2	INTERFACE CONNECTION	7
3-3	LVDS SIGNAL TIMING SPECIFICATIONS	8
3-4	SIGNAL TIMING SPECIFICATIONS	10
3-5	SIGNAL TIMING WAVEFORMS	10
3-6	COLOR INPUT DATA REFERNECE	11
3-7	POWER SEQUENCE	12
4	OPTICAL SFECIFICATIONS	13
5	MECHANICAL CHARACTERISTICS	16
6	RELIABLITY	20
7	INTERNATIONAL STANDARDS	
7-1	SAFETY	21
7-2	EMC	21
8	PACKING	
8-1	DESIGNATION OF LOT MARK	22
8-2	PACKING FORM	22
9	PRECAUTIONS	23
A	APPENDIX. Enhanced Extended Display Identification Data	25

RECORD OF REVISIONS

Revision No	Revision Date	Page	Description	EDID ver
0.0	July. 11. 2008	All	First Draft (Preliminary Specification)	-
0.2	Oct. 09. 2008	7	LED Power(@ Pin Map)	-
0.3	Nov.18.2008	7	BL_ON(@ Pin Map),	-
		13	Color Coordinates	-
		14	Gray Scale specification	-
1.0	Jan.13.2009	13	Optical characteristics	-

1. General Description

The LP101WS1 is a Color Active Matrix Liquid Crystal Display with an integral LED backlight system. The matrix employs a-Si Thin Film Transistor as the active element. It is a transmissive type display operating in the normally white mode. This TFT-LCD has 10.1inches diagonally measured active display area with WSVGA resolution(1024 horizontal by 576 vertical pixel array). Each pixel is divided into Red, Green and Blue sub-pixels or dots which are arranged in vertical stripes. Gray scale or the brightness of the sub-pixel color is determined with a 6-bit gray scale signal for each dot, thus, presenting a palette of more than 262,144 colors.

The LP101WS1 has been designed to apply the interface method that enables low power, high speed, low EMI.

The LP101WS1 is intended to support applications where thin thickness, low power are critical factors and graphic displays are important. In combination with the vertical arrangement of the sub-pixels, the LP101WS1 characteristics provide an excellent flat display for office automation products such as Notebook PC.

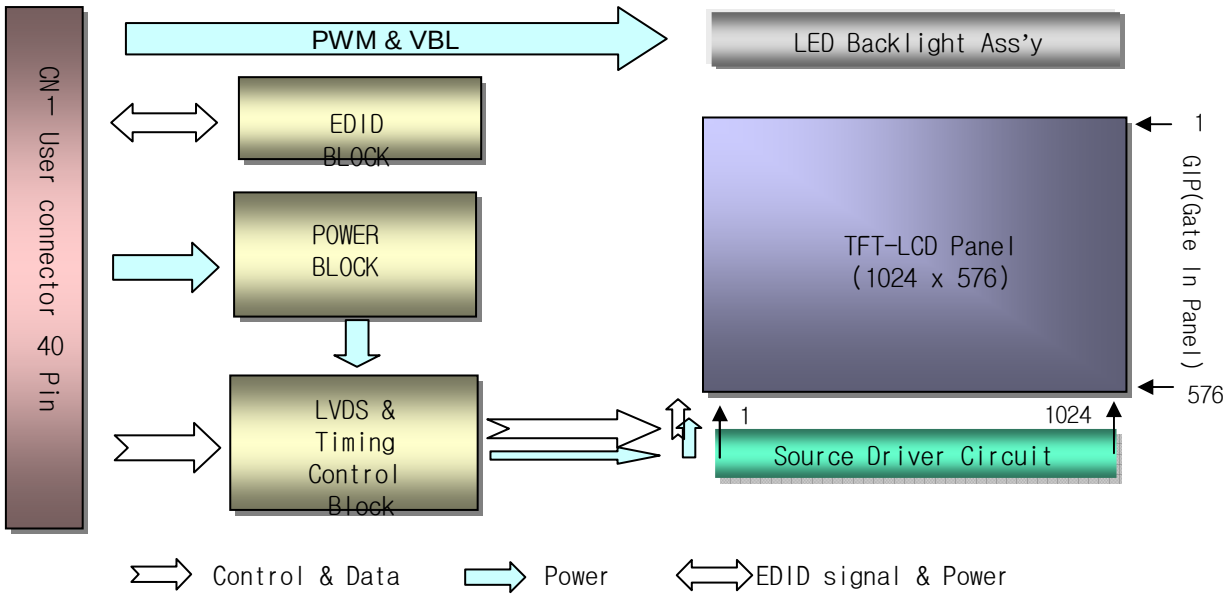

General Features

Active Screen Size	10.1 inches diagonal
Outline Dimension	235(H) × 143(V) × .5.2(D,Max.) [mm]
Pixel Pitch	0.2175mm × 0.2175 mm
Pixel Format	1024 horiz. By 576 vert. Pixels RGB strip arrangement
Color Depth	6-bit, 262,144 colors
Luminance, White	200 cd/m^2(Typ.5 point)
Power Consumption	Total 2.46 Watt(Typ.) @ LCM circuit 0.82 Watt(Typ.), B/L input 1.64 Watt(Typ.) (W/O LED Driver)
Weight	190g (Max.)
Display Operating Mode	Transmissive mode, normally white
Surface Treatment	Glare treatment of the front polarizer
RoHS Comply	Yes

2. Absolute Maximum Ratings

The following are maximum values which, if exceeded, may cause faulty operation or damage to the unit.

Table 1. ABSOLUTE MAXIMUM RATINGS

Parameter	Symbol	Values		Units	Notes
		Min	Max		
Power Input Voltage	VCC	-0.3	4.0	Vdc	at 25 ± 5°C
Operating Temperature	TOP	0	50	°C	1
Storage Temperature	HST	-20	60	°C	1
Operating Ambient Humidity	HOP	10	90	%RH	1
Storage Humidity	HST	10	90	%RH	1

Note : 1. Temperature and relative humidity range are shown in the figure below.
Wet bulb temperature should be 39°C Max, and no condensation of water.

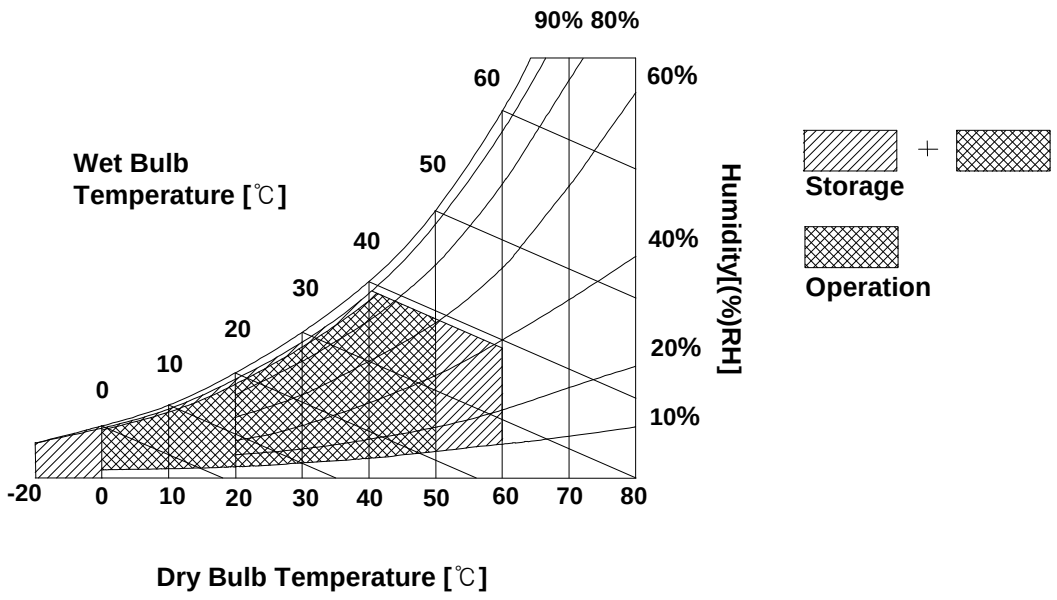

3. Electrical Specifications

3-1. Electrical Characteristics

The LP101WS1 requires two power inputs. One is employed to power the LCD electronics and to drive the TFT array and liquid crystal. The second input which powers the LED BL.

Table 2. ELECTRICAL CHARACTERISTICS

Parameter	Symbol	Values			Unit	Notes
		Min	Typ	Max		
MODULE :						
Power Supply Input Voltage	VCC	3.0	3.3	3.6	V_{DC}	
Power Supply Input Current	I_{CC}	-	250	280	mA	1
Power Consumption	Pc	-	0.82	0.93	Watt	1
Differential Impedance	Zm	90	100	110	Ohm	2
LED Backlight (With LED Driver) :						
LED Driver (@5V)	P_{DRIVER}	-	0.31	0.36	Watt	
Operating Voltage	V_{LED}	-	28.8	30.6	V	
Operating Current per string	I_{LED}	-	19		mA	3
Power Consumption	P_{BL}	-	1.64	1.74	Watt	4
Life Time		10,000	-	-	Hrs	5

Note)

1. The specified current and power consumption are under the Vcc = 3.3V , 25℃, fv = 60Hz condition whereas Mosaic pattern is displayed and fv is the frame frequency.

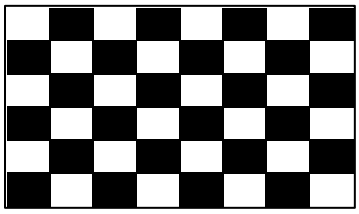

2. This impedance value is needed to proper display and measured form LVDS Tx to the mating connector.
3. The typical operating current is for the typical surface luminance (L_{WH}) in optical characteristics. I_{LED} is the current of each LED's string, LED backlight has 3 strings on it.
4. The LED power consumption shown above does not include power of external LED driver circuit for typical current condition.
5. The life time is determined as the time at which brightness of LED is 50% compare to that of initial value at the typical LED current.

3-2. Interface Connection

This LCD employs one interface connection, a 40 pin connector is used for the module electronics interface. The electronics interface connector is a model 20455-040E-0* manufactured by I-PEX.

Table 3. MODULE CONNECTOR PIN CONFIGURATION (CN1)

Pin	Symbol	Description	Notes
1	CT1/NC	Connector Test/No Connection(Reserved)	1, Interface chips 1.1 LCD : SiW, 1port including LVDS Receiver 1.2 System : * Pin to Pin compatible with LVDS 2. Connector 2.1 LCD :I-PEX 20455-040E-0* (Locking type) or equivalent 2.2 Mating : 2.3 Connector pin arrangement 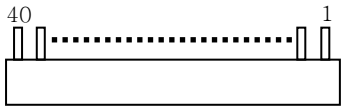 [LCD Module Rear View]
2	VDD	+3.3V Power Supply	
3	VDD	+3.3V Power Supply	
4	V_{EDID}	+3.3V EDID Power	
5	NC	No Connection	
6	CLK_{EDID}	EDID Clock Input	
7	$DATA_{EDID}$	EDID Data Input	
8	RxIN0-	LVDS differential data input	
9	RxIN0+	LVDS differential data input	
10	GND	Ground	
11	RxIN1-	LVDS differential data input	
12	RxIN1+	LVDS differential data input	
13	GND	Ground	
14	RxIN2-	LVDS differential data input	
15	RxIN2+	LVDS differential data input	
16	GND	Ground	
17	RxCLKIN-	LVDS differential clock input	
18	RxCLKIN+	LVDS differential clock input	
19	GND	Ground	
20	NC	No Connection	
21	NC	No Connection	
22	GND	Ground	
23	NC	No Connection	
24	NC	No Connection	
25	GND	Ground	
26	NC	No Connection	
27	NC	No Connection	
28	GND	Ground	
29	NC	No Connection	
30	NC	No Connection	
31	VLED_GND	LED Ground	
32	VLED_GND	LED Ground	
33	VLED_GND	LED Ground	
34	CT2/NC	Connector Test/No Connection(Reserved)	
35	S_PWMIN	System PWM signal input	
36	BL_ON	LED Enable[Note 1]	
37	NC	No Connection	
38	VLED	5V LED Power Supply	[Note 1] On: 2.0V↑,Off:0~0.4V
39	VLED	5V LED Power Supply	
40	VLED	5V LED Power Supply	

3-3. LVDS Signal Timing Specifications

3-3-1. DC Specification

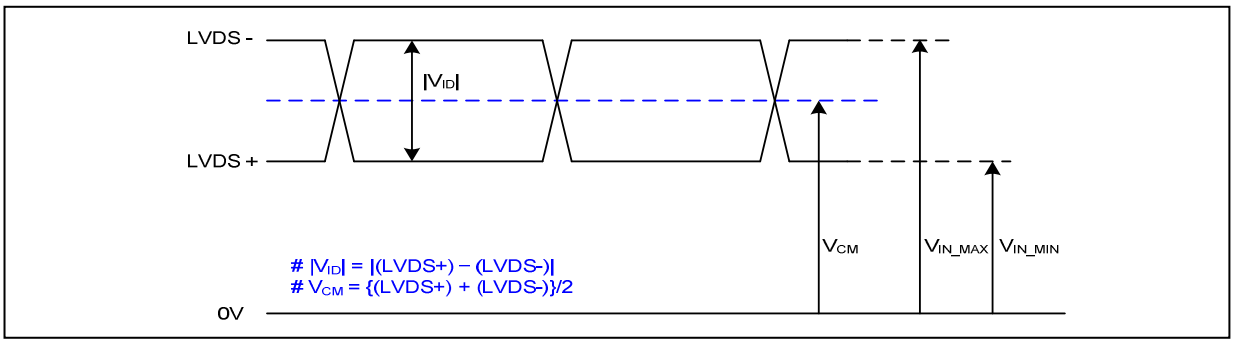

Description	Symbol	Min	Max	Unit	Notes
LVDS Differential Voltage	$\|V_{ID}\|$	100	600	mV	-
LVDS Common mode Voltage	V_{CM}	0.6	1.8	V	-
LVDS Input Voltage Range	V_{IN}	0.3	2.1	V	-

3-3-2. AC Specification

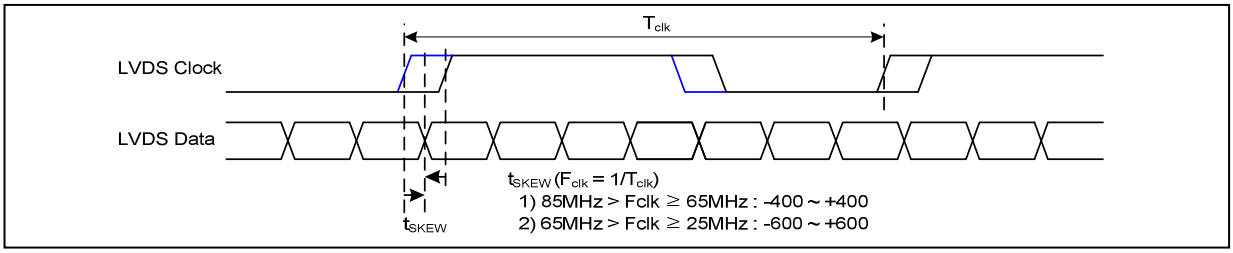

Description	Symbol	Min	Max	Unit	Notes
LVDS Clock to Data Skew Margin	t_{SKEW}	- 400	+ 400	ps	85MHz > Fclk ≥ 65MHz
	t_{SKEW}	- 600	+ 600	ps	65MHz > Fclk ≥ 25MHz
LVDS Clock to Clock Skew Margin (Even to Odd)	t_{SKEW_EO}	- 1/7	+ 1/7	T_{clk}	-
Maximum deviation of input clock frequency during SSC	F_{DEV}	-	± 3	%	-
Maximum modulation frequency of input clock during SSC	F_{MOD}	-	200	KHz	-

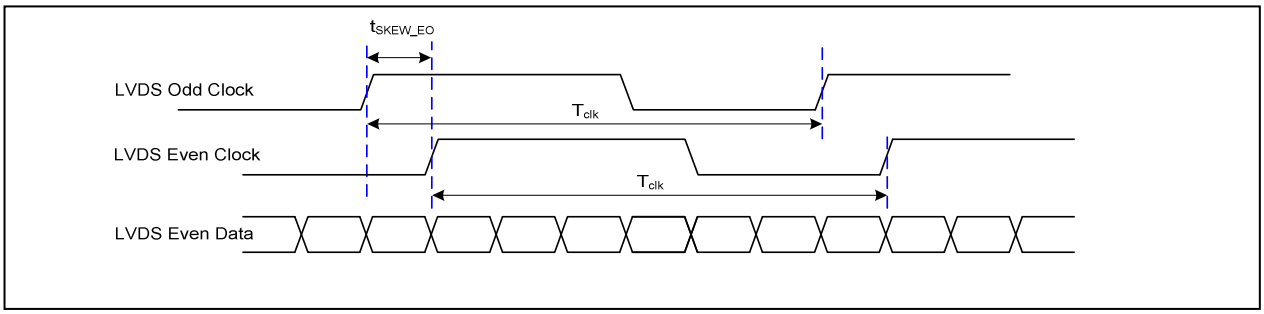

< Clock skew margin between channel >

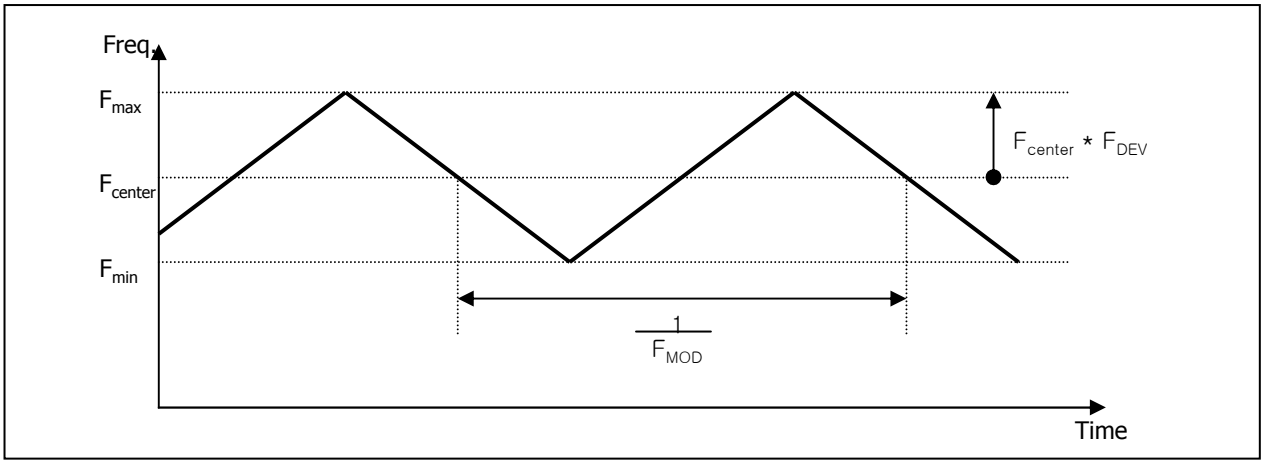

< Spread Spectrum >

3-3-3. Data Format

- LVDS 1 Port

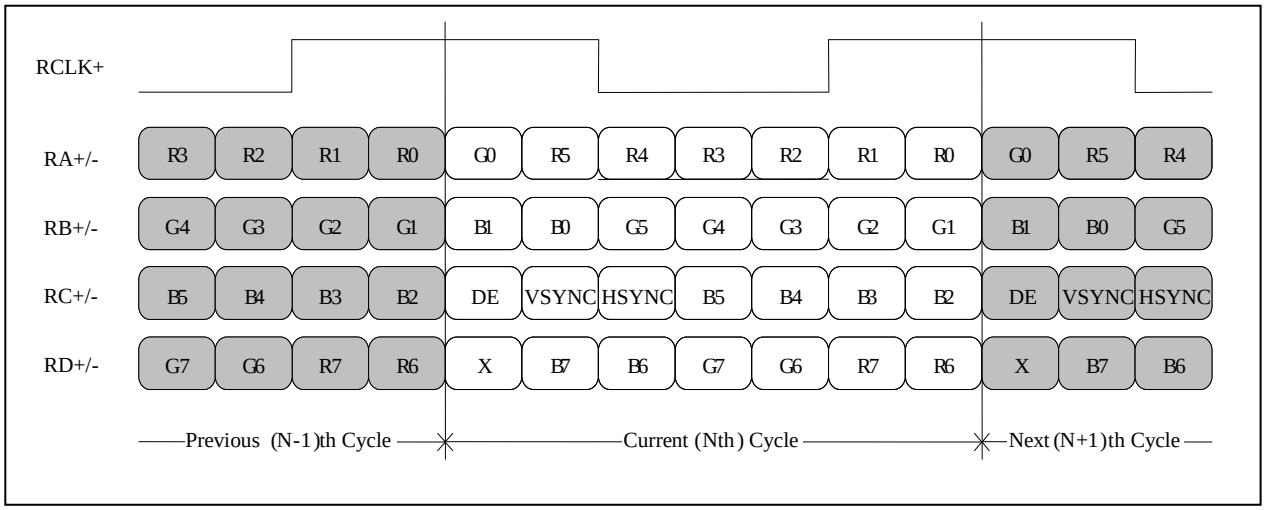

< LVDS Data Format >

3-4. Signal Timing Specifications

This is the signal timing required at the input of the User connector. All of the interface signal timing should be satisfied with the following specifications and specifications of LVDS Tx/Rx for its proper operation.

Table 5. TIMING TABLE

ITEM	Symbol		Min	Typ	Max	Unit	Note
DCLK	Frequency	f_{CLK}	37.2	42.2	47.2	MHz	
Hsync	Period	Thp	1112	1184	1256	tCLK	
	Width	t_{WH}	16	32	48		
	Width-Active	t_{WHA}	1024	1024	1024		
Vsync	Period	t_{VP}	584	593	602	tHP	
	Width	t_{WV}	1	5	9		
	Width-Active	t_{WVA}	576	576	576		
Data Enable	Horizontal back porch	t_{HBP}	40	80	120	tCLK	
	Horizontal front porch	t_{HFP}	32	48	64		
	Vertical back porch	t_{VBP}	6	9	12	tHP	
	Vertical front porch	t_{VFP}	1	3	5		

3-5. Signal Timing Waveforms

Condition : VCC =3.3V

Data Enable, Hsync, Vsync

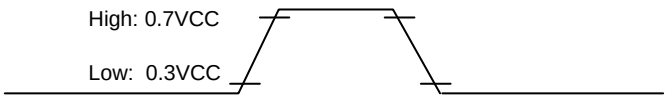

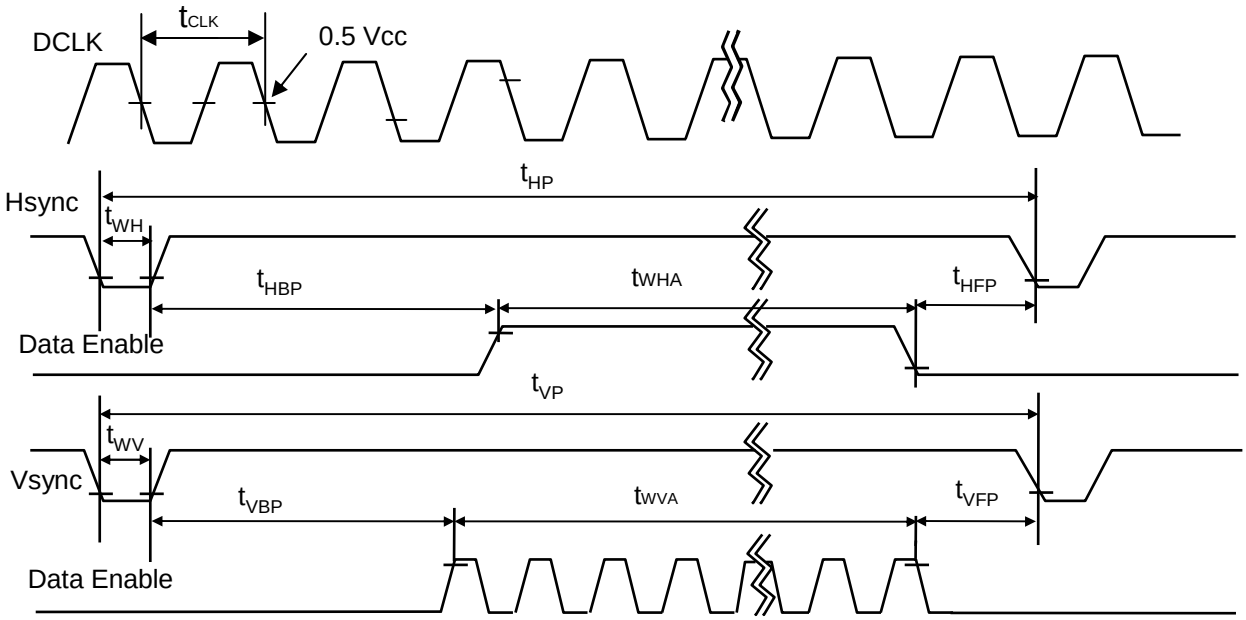

3-6. Color Input Data Reference

The brightness of each primary color (red,green and blue) is based on the 6-bit gray scale data input for the color ; the higher the binary input, the brighter the color. The table below provides a reference for color versus data input.

Table 7. COLOR DATA REFERENCE

Color		Input Color Data																	
		RED						GREEN						BLUE					
		MSB					LSB	MSB					LSB	MSB					LSB
		R 5	R 4	R 3	R 2	R 1	R 0	G 5	G 4	G 3	G 2	G 1	G 0	B 5	B 4	B 3	B 2	B 1	B 0
Basic Color	Black	0	0	0	0	0	0	0	0	0	0	0	0	0	0	0	0	0	0
	Red	1	1	1	1	1	1	0	0	0	0	0	0	0	0	0	0	0	0
	Green	0	0	0	0	0	0	1	1	1	1	1	1	0	0	0	0	0	0
	Blue	0	0	0	0	0	0	0	0	0	0	0	0	1	1	1	1	1	1
	Cyan	0	0	0	0	0	0	1	1	1	1	1	1	1	1	1	1	1	1
	Magenta	1	1	1	1	1	1	0	0	0	0	0	0	1	1	1	1	1	1
	Yellow	1	1	1	1	1	1	1	1	1	1	1	1	0	0	0	0	0	0
	White	1	1	1	1	1	1	1	1	1	1	1	1	1	1	1	1	1	1
RED	RED (00)	0	0	0	0	0	0	0	0	0	0	0	0	0	0	0	0	0	0
	RED (01)	0	0	0	0	0	1	0	0	0	0	0	0	0	0	0	0	0	0
	...	...						...						...					
	RED (62)	1	1	1	1	1	0	0	0	0	0	0	0	0	0	0	0	0	0
	RED (63)	1	1	1	1	1	1	0	0	0	0	0	0	0	0	0	0	0	0
GREEN	GREEN (00)	0	0	0	0	0	0	0	0	0	0	0	0	0	0	0	0	0	0
	GREEN (01)	0	0	0	0	0	0	0	0	0	0	0	1	0	0	0	0	0	0
	...	...						...						...					
	GREEN (62)	0	0	0	0	0	0	1	1	1	1	1	0	0	0	0	0	0	0
	GREEN (63)	0	0	0	0	0	0	1	1	1	1	1	1	0	0	0	0	0	0
BLUE	BLUE (00)	0	0	0	0	0	0	0	0	0	0	0	0	0	0	0	0	0	0
	BLUE (01)	0	0	0	0	0	0	0	0	0	0	0	0	0	0	0	0	0	1
	...	...						...						...					
	BLUE (62)	0	0	0	0	0	0	0	0	0	0	0	0	1	1	1	1	1	0
	BLUE (63)	0	0	0	0	0	0	0	0	0	0	0	0	1	1	1	1	1	1

3-7. Power Sequence

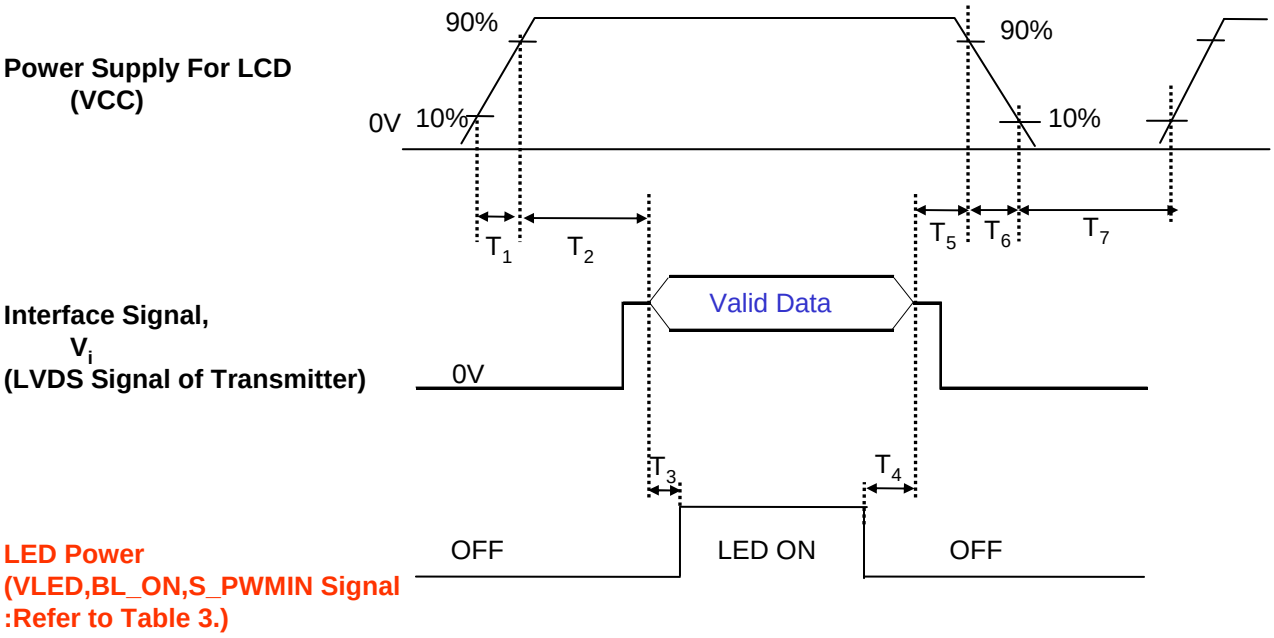

Table 7. POWER SEQUENCE TABLE

Parameter	Value			Units
	Min.	Typ.	Max.	
T_1	0.5	-	10	(ms)
T_2	0	-	50	(ms)
T_3	200	-	-	(ms)
T_4	200	-	-	(ms)
T_5	0	-	50	(ms)
T_6	0	-	10	(ms)
T_7	400	-	-	(ms)

Note)
1. Valid Data is Data to meet “3-3. LVDS Signal Timing Specifications”
2. Please avoid floating state of interface signal at invalid period.
3. When the interface signal is invalid, be sure to pull down the power supply for LCD VCC to 0V.
4. LED power must be turn on after power supply for LCD and interface signal are valid.

4. Optical Specification

Optical characteristics are determined after the unit has been 'ON' and stable for approximately 30 minutes in a dark environment at 25°C. The values specified are at an approximate distance 50cm from the LCD surface at a viewing angle of Φ and Θ equal to 0°.
FIG. 1 presents additional information concerning the measurement equipment and method.

FIG. 1 Optical Characteristic Measurement Equipment and Method

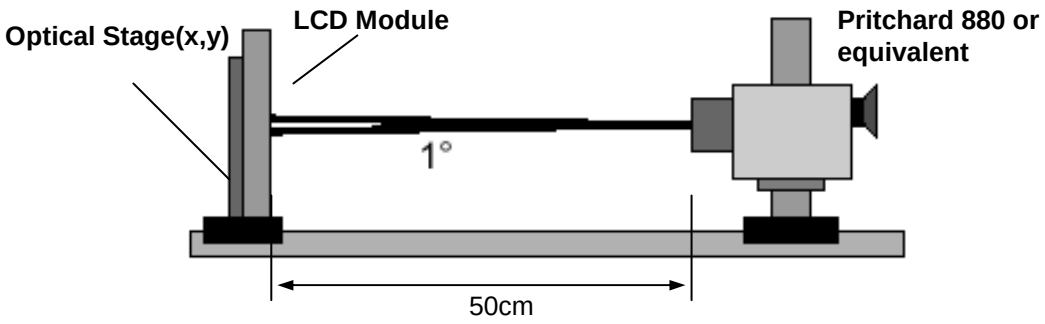

Table 8. OPTICAL CHARACTERISTICS

Ta=25°C, VCC=3.3V, fv=60Hz, f_{CLK}= 42.2MHz, I_{BL}= 19 mA

Parameter	Symbol	Values			Units	Notes
		Min	Typ	Max		
Contrast Ratio	CR	300	-	-		1
Surface Luminance, white	L_{WH}	170	200	-	cd/m²	2
Luminance Variation	δ_{WHITE}	-	1.4	1.6		3
Response Time	$Tr_R + Tr_D$	-	16	25	ms	4
Color Coordinates						
RED	RX	0.558	0.588	0.618	0.558	
	RY	0.317	0.347	0.377	0.317	
GREEN	GX	0.301	0.331	0.361	0.301	
	GY	0.516	0.546	0.576	0.516	
BLUE	BX	0.124	0.154	0.184	0.124	
	BY	0.098	0.128	0.158	0.098	
WHITE	WX	0.283	0.313	0.343	0.283	
	WY	0.299	0.329	0.359	0.299	
Viewing Angle						5
x axis, right(Φ=0°)	Θr	30	-	-	degree	
x axis, left (Φ=180°)	Θl	30	-	-	degree	
y axis, up (Φ=90°)	Θu	10	-	-	degree	
y axis, down (Φ=270°)	Θd	20	-	-	degree	
Gray Scale			2.2			6

Note)

1. Contrast Ratio(CR) is defined mathematically as

$$\text{Contrast Ratio} = \frac{\text{Surface Luminance with all white pixels}}{\text{Surface Luminance with all black pixels}}$$

2. Surface luminance is the average of 5 point across the LCD surface 50cm from the surface with all pixels displaying white. For more information see FIG 1.

$$L_{WH} = \text{Average}(L_1, L_2, \ldots L_5)$$

3. The variation in surface luminance , The panel total variation (δ_{WHITE}) is determined by measuring L_N at each test position 1 through 13 and then defined as followed numerical formula. For more information see FIG 2.

$$\delta_{WHITE} = \frac{\text{Maximum}(L_1, L_2, \ldots L_{13})}{\text{Minimum}(L_1, L_2, \ldots L_{13})}$$

4. Response time is the time required for the display to transition from white to black (rise time, Tr_R) and from black to white(Decay Time, Tr_D). For additional information see FIG 3.

5. Viewing angle is the angle at which the contrast ratio is greater than 10. The angles are determined for the horizontal or x axis and the vertical or y axis with respect to the z axis which is normal to the LCD surface. For more information see FIG 4.

6. Gray scale specification

* f_V = 60Hz

Gray Level	Luminance [%] (Typ)
L0	0.25
L7	0.89
L15	3.41
L23	9.01
L31	19.84
L39	34.84
L47	52.65
L55	72.78
L63	100

FIG. 2 Luminance

<measuring point for surface luminance & measuring point for luminance variation>

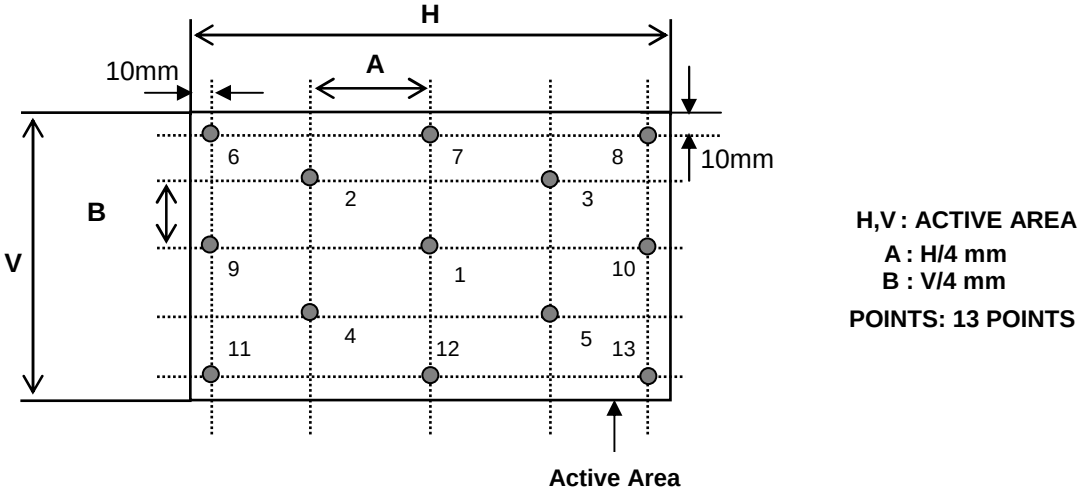

FIG. 3 Response Time

The response time is defined as the following figure and shall be measured by switching the input signal for “black” and “white”.

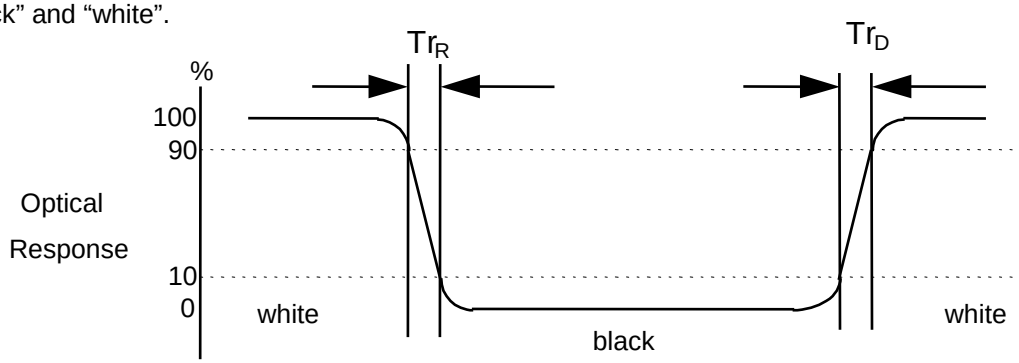

FIG. 4 Viewing angle

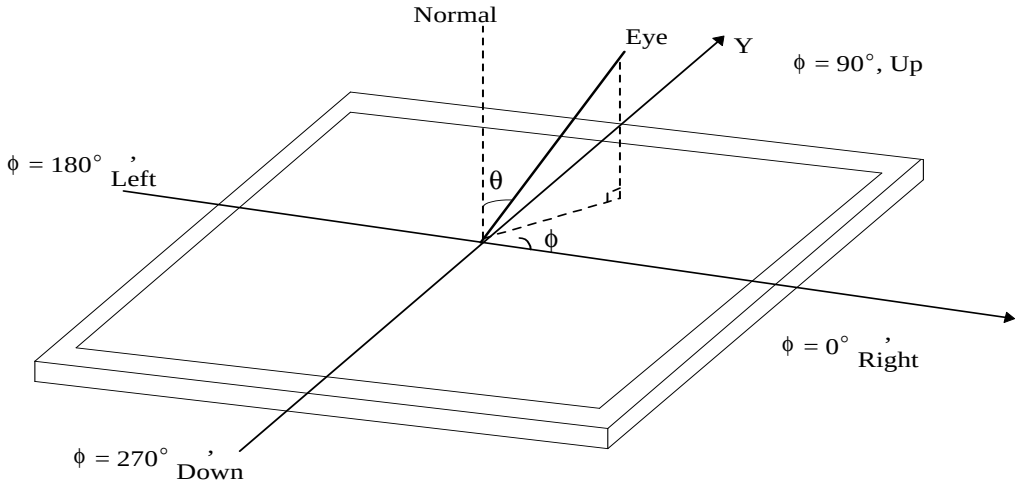

5. Mechanical Characteristics

The contents provide general mechanical characteristics for the model LP101WS1. In addition the figures in the next page are detailed mechanical drawing of the LCD.

Outline Dimension	Horizontal	235.0 ± 0.5 mm
	Vertical	143.0 ± 0.5 mm
	Thickness	5.2mm (max)
Bezel Area	Horizontal	226.00 mm
	Vertical	128.70 mm
Active Display Area	Horizontal	222.72 mm
	Vertical	125.28 mm
Weight	190g (Max.)	
Surface Treatment	Glare treatment of the front polarizer	

<FRONT VIEW>

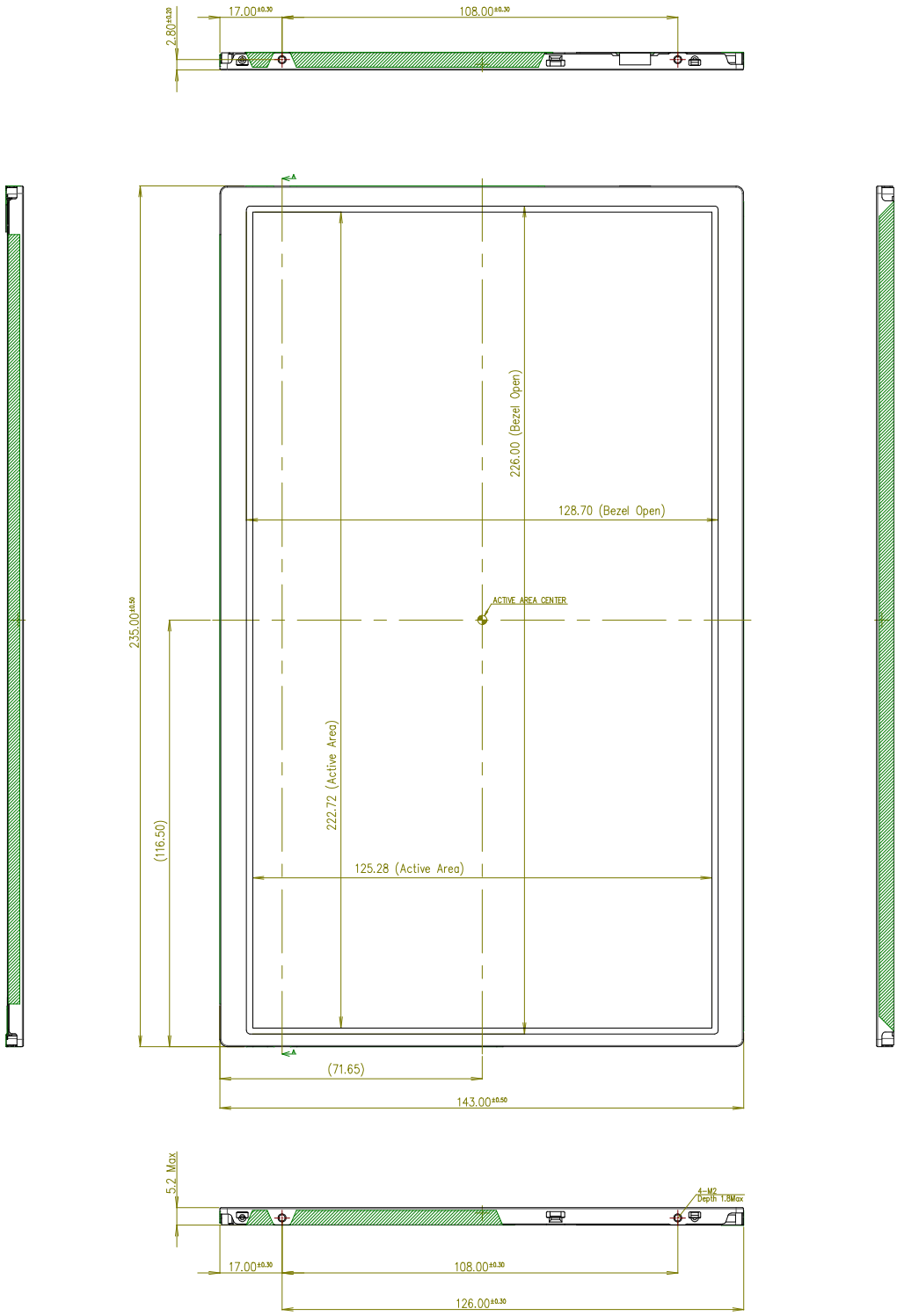
17.00±0.30
108.00±0.30
2.80±0.20
226.00 (Bezel Open)
128.70 (Bezel Open)
ACTIVE AREA CENTER
235.00±0.50
222.72 (Active Area)
(116.50)
125.28 (Active Area)
(71.65)
143.00±0.50
5.2 Max
4-M2
Depth 1.8Max
17.00±0.30
108.00±0.30
126.00±0.30

<REAR VIEW>

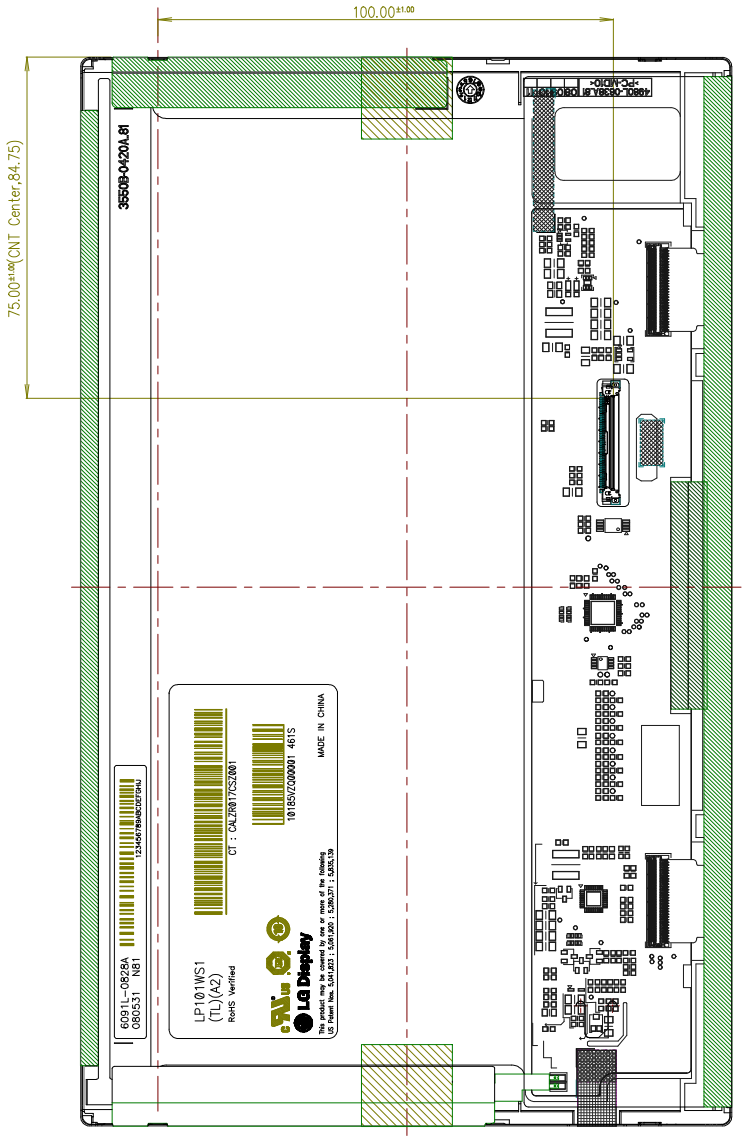
100.00±1.00
75.00±1.0%(CNT Center;84.75)
3550B-0420A.81
6091L-0828A
080531 N81
LP101WS1
(TL)(A2)
RoHS Verified
CT : CALZ0017CSZ001
10185VZ000001 461S
MADE IN CHINA
LG Display

[DETAIL DESCRIPTION OF SIDE MOUNTING SCREW]

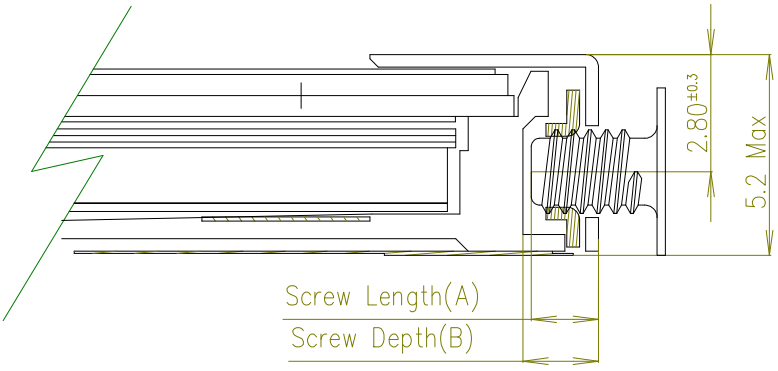

Section A-A

* Mounting Screw Length (A)
  = 1.5(Min) /1.8(Max)
* Mounting Screw Hole Depth (B)
  = 1.8(Min)
* Mounting hole location : 2.8(typ.)
* Torque : 2.0 kgf.cm(Max)
  (Measurement gauge : torque meter)

Notes : 1. Screw plated through the method of non-electrolytic nickel plating is preferred to reduce possibility that results in vertical and/or horizontal line defect due to the conductive particles from screw surface.

6. Reliability

Environment test condition

No.	Test Item	Conditions
1	High temperature storage test	Ta= 60°C, 240h
2	Low temperature storage test	Ta= -20°C, 240h
3	High temperature operation test	Ta= 50°C, 50%RH, 240h
4	Low temperature operation test	Ta= 0°C, 240h
5	Vibration test (non-operating)	Sine wave, 10 ~ 500 ~ 10Hz, 1.5G, 0.37oct/min 3 axis, 1hour/axis
6	Shock test (non-operating)	Half sine wave, 180G, 2ms one shock of each six faces(I.e. run 180G 6ms for all six faces)
7	Altitude operating storage / shipment	0 ~ 10,000 feet (3,048m) 24Hr 0 ~ 40,000 feet (12,192m) 24Hr

{ Result Evaluation Criteria }
There should be no change which might affect the practical display function when the display quality test is conducted under normal operating condition.

7. International Standards

7-1. Safety

a) UL 60950-1:2003, First Edition, Underwriters Laboratories, Inc.,
Standard for Safety of Information Technology Equipment.
b) CAN/CSA C22.2, No. 60950-1-03 1st Ed. April 1, 2003, Canadian Standards Association,
Standard for Safety of Information Technology Equipment.
c) EN 60950-1:2001, First Edition,
European Committee for Electrotechnical Standardization(CENELEC)
European Standard for Safety of Information Technology Equipment.

7-2. EMC

a) ANSI C63.4 “Methods of Measurement of Radio-Noise Emissions from Low-Voltage Electrical and Electrical Equipment in the Range of 9kHZ to 40GHz. “American National Standards Institute(ANSI), 1992
b) C.I.S.P.R “Limits and Methods of Measurement of Radio Interface Characteristics of Information Technology Equipment.“ International Special Committee on Radio Interference.
c) EN 55022 “Limits and Methods of Measurement of Radio Interface Characteristics of Information Technology Equipment.“ European Committee for Electrotechnical Standardization.(CENELEC), 1998
(Including A1: 2000)

8. Packing

8-1. Designation of Lot Mark

a) Lot Mark

A	B	C	D	E	F	G	H	I	J	K	L	M

A,B,C : SIZE(INCH)
E : MONTH
D : YEAR
F ~ M : SERIAL NO.

Note

1. YEAR

Year	2001	2002	2003	2004	2005	2006	2007	2008	2009	2010
Mark	1	2	3	4	5	6	7	8	9	0

2. MONTH

Month	Jan	Feb	Mar	Apr	May	Jun	Jul	Aug	Sep	Oct	Nov	Dec
Mark	1	2	3	4	5	6	7	8	9	A	B	C

b) Location of Lot Mark

Serial No. is printed on the label. The label is attached to the backside of the LCD module.
This is subject to change without prior notice.

8-2. Packing Form

a) Package quantity in one box : 40 pcs

b) Box Size : 395mm × 390mm × 309mm

9. PRECAUTIONS

Please pay attention to the followings when you use this TFT LCD module.

9-1. MOUNTING PRECAUTIONS

(1) You must mount a module using holes arranged in four corners or four sides.
(2) You should consider the mounting structure so that uneven force (ex. Twisted stress) is not applied to the module. And the case on which a module is mounted should have sufficient strength so that external force is not transmitted directly to the module.
(3) Please attach the surface transparent protective plate to the surface in order to protect the polarizer. Transparent protective plate should have sufficient strength in order to the resist external force.
(4) You should adopt radiation structure to satisfy the temperature specification.
(5) Acetic acid type and chlorine type materials for the cover case are not desirable because the former generates corrosive gas of attacking the polarizer at high temperature and the latter causes circuit break by electro-chemical reaction.
(6) Do not touch, push or rub the exposed polarizers with glass, tweezers or anything harder than HB pencil lead. And please do not rub with dust clothes with chemical treatment.
Do not touch the surface of polarizer for bare hand or greasy cloth.(Some cosmetics are detrimental to the polarizer.)
(7) When the surface becomes dusty, please wipe gently with absorbent cotton or other soft materials like chamois soaks with petroleum benzene. Normal-hexane is recommended for cleaning the adhesives used to attach front / rear polarizers. Do not use acetone, toluene and alcohol because they cause chemical damage to the polarizer.
(8) Wipe off saliva or water drops as soon as possible. Their long time contact with polarizer causes deformations and color fading.
(9) Do not open the case because inside circuits do not have sufficient strength.

9-2. OPERATING PRECAUTIONS

(1) The spike noise causes the mis-operation of circuits. It should be lower than following voltage :
V=± 200mV(Over and under shoot voltage)

(2) Response time depends on the temperature.(In lower temperature, it becomes longer.)
(3) Brightness depends on the temperature. (In lower temperature, it becomes lower.)
And in lower temperature, response time(required time that brightness is stable after turned on) becomes longer.
(4) Be careful for condensation at sudden temperature change. Condensation makes damage to polarizer or electrical contacted parts. And after fading condensation, smear or spot will occur.
(5) When fixed patterns are displayed for a long time, remnant image is likely to occur.
(6) Module has high frequency circuits. Sufficient suppression to the electromagnetic interference shall be done by system manufacturers. Grounding and shielding methods may be important to minimized the interference.

9-3. ELECTROSTATIC DISCHARGE CONTROL

Since a module is composed of electronic circuits, it is not strong to electrostatic discharge. Make certain that treatment persons are connected to ground through wrist band etc. And don't touch interface pin directly.

9-4. PRECAUTIONS FOR STRONG LIGHT EXPOSURE

Strong light exposure causes degradation of polarizer and color filter.

9-5. STORAGE

When storing modules as spares for a long time, the following precautions are necessary.

(1) Store them in a dark place. Do not expose the module to sunlight or fluorescent light. Keep the temperature between 5°C and 35°C at normal humidity.
(2) The polarizer surface should not come in contact with any other object.
It is recommended that they be stored in the container in which they were shipped.

9-6. HANDLING PRECAUTIONS FOR PROTECTION FILM

(1) When the protection film is peeled off, static electricity is generated between the film and polarizer. This should be peeled off slowly and carefully by people who are electrically grounded and with well ion-blown equipment or in such a condition, etc.
(2) The protection film is attached to the polarizer with a small amount of glue. If some stress is applied to rub the protection film against the polarizer during the time you peel off the film, the glue is apt to remain on the polarizer.
Please carefully peel off the protection film without rubbing it against the polarizer.
(3) When the module with protection film attached is stored for a long time, sometimes there remains a very small amount of glue still on the polarizer after the protection film is peeled off.
(4) You can remove the glue easily. When the glue remains on the polarizer surface or its vestige is recognized, please wipe them off with absorbent cotton waste or other soft material like chamois soaked with normal-hexane.

APPENDIX A. Enhanced Extended Display Identification Data (EEDID™) 1/3

	Byte (Dec)	Byte (Hex)	Field Name and Comments	Value (Hex)	Value (Bin)
Header	0	00	Header	00	00000000
	1	01	Header	FF	11111111
	2	02	Header	FF	11111111
	3	03	Header	FF	11111111
	4	04	Header	FF	11111111
	5	05	Header	FF	11111111
	6	06	Header	FF	11111111
	7	07	Header	00	00000000
Vendor / Product EDID Version	8	08	EISA manufacture code (3 Character ID) LGD	30	00110000
	9	09	EISA manufacture code (Compressed ASCII)	E4	11100100
	10	0A	Panel Supplier Reserved - Product Code 0000h	00	00000000
	11	0B	(Hex LSB first)	00	00000000
	12	0C	LCD Module Serial No - Preferred but Optional ("0" If not used)	00	00000000
	13	0D	LCD Module Serial No - Preferred but Optional ("0" If not used)	00	00000000
	14	0E	LCD Module Serial No - Preferred but Optional ("0" If not used)	00	00000000
	15	0F	LCD Module Serial No - Preferred but Optional ("0" If not used)	00	00000000
	16	10	Week of Manufacture 00 weeks	00	00000000
	17	11	Year of Manufacture 2008 years	12	00010010
	18	12	EDID structure version # = 1	01	00000001
	19	13	EDID revision # = 3	03	00000011
Display Parameters	20	14	Video input Definition = Digital signal	80	10000000
	21	15	Max H image size (Rounded cm) = 22 cm	16	00010110
	22	16	Max V image size (Rounded cm) = 13 cm	0D	00001101
	23	17	Display gamma = (gamma*100)-100 = Example:(2 2*100)-100=120 = 2 2 Gamma	78	01111000
	24	18	Feature Support (no_DPMS, no_Active Off/Very Low Power, RGB color display, Timing BLK 1,no_ GTF)	0A	00001010
Panel Color Coordinates	25	19	Red/Green Low Bits (RxRy/GxGy)	BF	10111111
	26	1A	Blue/White Low Bits (BxBy/WxWy)	B5	10110101
	27	1B	Red X Rx = 0 588	96	10010110
	28	1C	Red Y Ry = 0 347	58	01011000
	29	1D	Green X Gx = 0 331	54	01010100
	30	1E	Green Y Gy = 0 546	8B	10001011
	31	1F	Blue X Bx = 0 154	27	00100111
	32	20	Blue Y By = 0 128	20	00100000
	33	21	White X Wx = 0 313	50	01010000
	34	22	White Y Wy = 0 329	54	01010100
Established Timings	35	23	Established timing 1 (00h if not used)	00	00000000
	36	24	Established timing 2 (00h if not used)	00	00000000
	37	25	Manufacturer's timings (00h if not used)	00	00000000
Standard Timing ID	38	26	Standard timing ID1 (01h if not used)	01	00000001
	39	27	Standard timing ID1 (01h if not used)	01	00000001
	40	28	Standard timing ID2 (01h if not used)	01	00000001
	41	29	Standard timing ID2 (01h if not used)	01	00000001
	42	2A	Standard timing ID3 (01h if not used)	01	00000001
	43	2B	Standard timing ID3 (01h if not used)	01	00000001
	44	2C	Standard timing ID4 (01h if not used)	01	00000001
	45	2D	Standard timing ID4 (01h if not used)	01	00000001
	46	2E	Standard timing ID5 (01h if not used)	01	00000001
	47	2F	Standard timing ID5 (01h if not used)	01	00000001
	48	30	Standard timing ID6 (01h if not used)	01	00000001
	49	31	Standard timing ID6 (01h if not used)	01	00000001
	50	32	Standard timing ID7 (01h if not used)	01	00000001
	51	33	Standard timing ID7 (01h if not used)	01	00000001
	52	34	Standard timing ID8 (01h if not used)	01	00000001
	53	35	Standard timing ID8 (01h if not used)	01	00000001

APPENDIX A. Enhanced Extended Display Identification Data (EEDID™) 2/3

	Byte (Dec)	Byte (Hex)	Field Name and Comments	Value (Hex)	Value (Bin)
Timing Descriptor #1	54	36	Pixel Clock/10,000 (LSB) 42 2 MHz @ 60 1Hz	7C	01111100
	55	37	Pixel Clock/10,000 (MSB)	10	00010000
	56	38	Horizontal Active (lower 8 bits) 1024 Pixels	00	00000000
	57	39	Horizontal Blanking(Thp-HA) (lower 8 bits) 160 Pixels	A0	10100000
	58	3A	Horizontal Active / Horizontal Blanking(Thp-HA) (upper 4:4bits)	40	01000000
	59	3B	Vertical Avtive 576 Lines	40	01000000
	60	3C	Vertical Blanking (Tvp-HA) (DE Blanking typ for DE only panels) 17 Lines	11	00010001
	61	3D	Vertical Active : Vertical Blanking (Tvp-HA) (upper 4:4bits)	20	00100000
	62	3E	Horizontal Sync Offset (Thfp) 48 Pixels	30	00110000
	63	3F	Horizontal Sync Pulse Width (HSPW) 32 Pixels	20	00100000
	64	40	Vertical Sync Offset(Tvfp) : Sync Width (VSPW) 3 Lines : 5 Lines	35	00110101
	65	41	Horizontal Vertical Sync Offset/Width (upper 2bits)	00	00000000
	66	42	Horizontal Image Size (mm) 224 mm	E0	11100000
	67	43	Vertical Image Size (mm) 126 mm	7E	01111110
	68	44	Horizontal Image Size / Vertical Image Size	00	00000000
	69	45	Horizontal Border = 0 (Zero for Notebook LCD)	00	00000000
	70	46	Vertical Border = 0 (Zero for Notebook LCD)	00	00000000
	71	47	Non-Interlace, Normal display, no stereo, Digital Separate (Vsync_NEG, Hsync_NEG), DE only note : LSB is set to '1' if panel is DE-timing only H/V can be ignored	19	00011001
Timing Descriptor #2	72	48	Flag	00	00000000
	73	49	Flag	00	00000000
	74	4A	Flag	00	00000000
	75	4B	Data Type Tag (Descriptor Defined by manufacturer)	00	00000000
	76	4C	Flag	00	00000000
	77	4D	Descriptor Defined by manufacturer	00	00000000
	78	4E	Descriptor Defined by manufacturer	00	00000000
	79	4F	Descriptor Defined by manufacturer	00	00000000
	80	50	Descriptor Defined by manufacturer	00	00000000
	81	51	Descriptor Defined by manufacturer	00	00000000
	82	52	Descriptor Defined by manufacturer	00	00000000
	83	53	Descriptor Defined by manufacturer	00	00000000
	84	54	Descriptor Defined by manufacturer	00	00000000
	85	55	Descriptor Defined by manufacturer	00	00000000
	86	56	Descriptor Defined by manufacturer	00	00000000
	87	57	Descriptor Defined by manufacturer	00	00000000
	88	58	Descriptor Defined by manufacturer	00	00000000
	89	59	Descriptor Defined by manufacturer	00	00000000
Timing Descriptor #3	90	5A	Flag	00	00000000
	91	5B	Flag	00	00000000
	92	5C	Flag	00	00000000
	93	5D	Data Type Tag (ASCII String)	FE	11111110
	94	5E	Flag	00	00000000
	95	5F	ASCII String L	4C	01001100
	96	60	ASCII String G	47	01000111
	97	61	ASCII String	20	00100000
	98	62	ASCII String D	44	01000100
	99	63	ASCII String i	69	01101001
	100	64	ASCII String s	73	01110011
	101	65	ASCII String p	70	01110000
	102	66	ASCII String l	6C	01101100
	103	67	ASCII String a	61	01100001
	104	68	ASCII String y	79	01111001
	105	69	Manufacturer P/N(If<13 char--> 0Ah, then terminate with ASCⅡ code 0Ah,set remaining char = 20h)	0A	00001010
	106	6A	Manufacturer P/N(If<13 char--> 0Ah, then terminate with ASCⅡ code 0Ah,set remaining char = 20h)	20	00100000
	107	6B	Manufacturer P/N(If<13 char--> 0Ah, then terminate with ASCⅡ code 0Ah,set remaining char = 20h)	20	00100000

APPENDIX A. Enhanced Extended Display Identification Data (EEDID™) 3/3

	Byte (Dec)	Byte (Hex)	Field Name and Comments		Value (Hex)	Value (Bin)
Timing Descriptor #4	108	6C	Flag		00	00000000
	109	6D	Flag		00	00000000
	110	6E	Flag		00	00000000
	111	6F	Data Type Tag (Monitor Name, stored as ASCII)		FC	11111100
	112	70	Flag		00	00000000
	113	71	Monitor Name, stored as ASCII	L	4C	01001100
	114	72	Monitor Name, stored as ASCII	P	50	01010000
	115	73	Monitor Name, stored as ASCII	1	31	00110001
	116	74	Monitor Name, stored as ASCII	0	30	00110000
	117	75	Monitor Name, stored as ASCII	1	31	00110001
	118	76	Monitor Name, stored as ASCII	W	57	01010111
	119	77	Monitor Name, stored as ASCII	S	53	01010011
	120	78	Monitor Name, stored as ASCII	1	31	00110001
	121	79	Monitor Name, stored as ASCII	-	2D	00101101
	122	7A	Monitor Name, stored as ASCII	T	54	01010100
	123	7B	Monitor Name, stored as ASCII	L	4C	01001100
	124	7C	Monitor Name, stored as ASCII	A	41	01000001
	125	7D	Monitor Name, stored as ASCII	2	32	00110010
Checksum	126	7E	Extension flag (# of optional 128 panel ID extension block to follow, Typ = 0)		00	00000000
	127	7F	Check Sum (The 1-byte sum of all 128 bytes in this panel ID block shall = 0)		8C	10001100